CUSTOMER APPROVAL REQUIRED	
APPROVED BY	
DATE	

FOR QUOTATION PURPOSE ONLY

All Dimensions are in MM

Rev.No.	Ch.Let	Alterations	Date	Sign.	Appd.

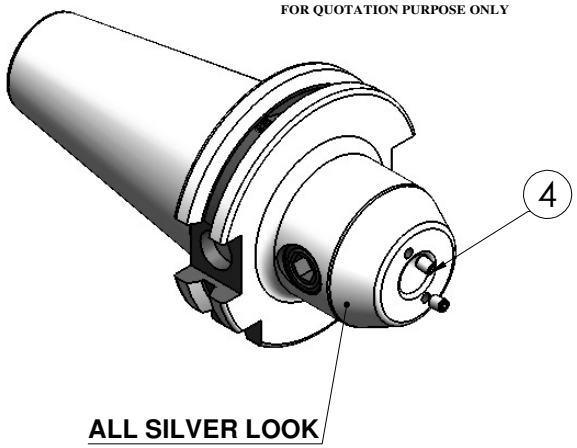

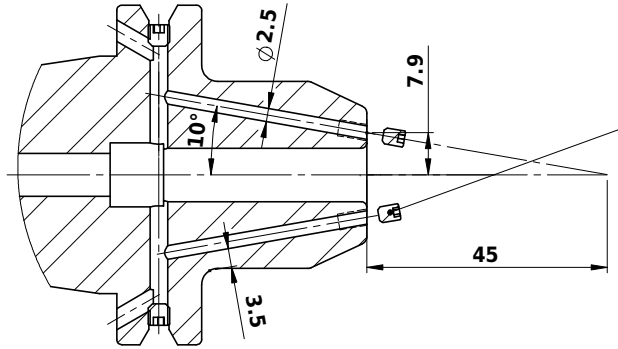

H-H (1 : 1)

SCREWS TO BE PACKED SEPERATELY
IN PLASTIC POUCH WITH LABEL & PUT INTO
WELDON BORE & THEN SEAL THE HOLDER WITH COVER

LABEL FOR PLASTIC BAGS:
Verschlussschraube
Grub Screw
M3 X 5mm x 1.5 mm

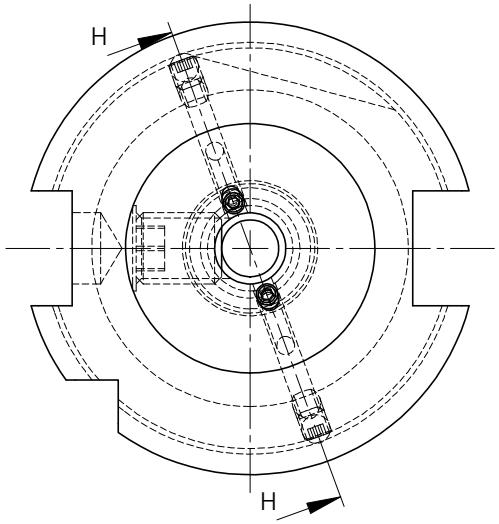

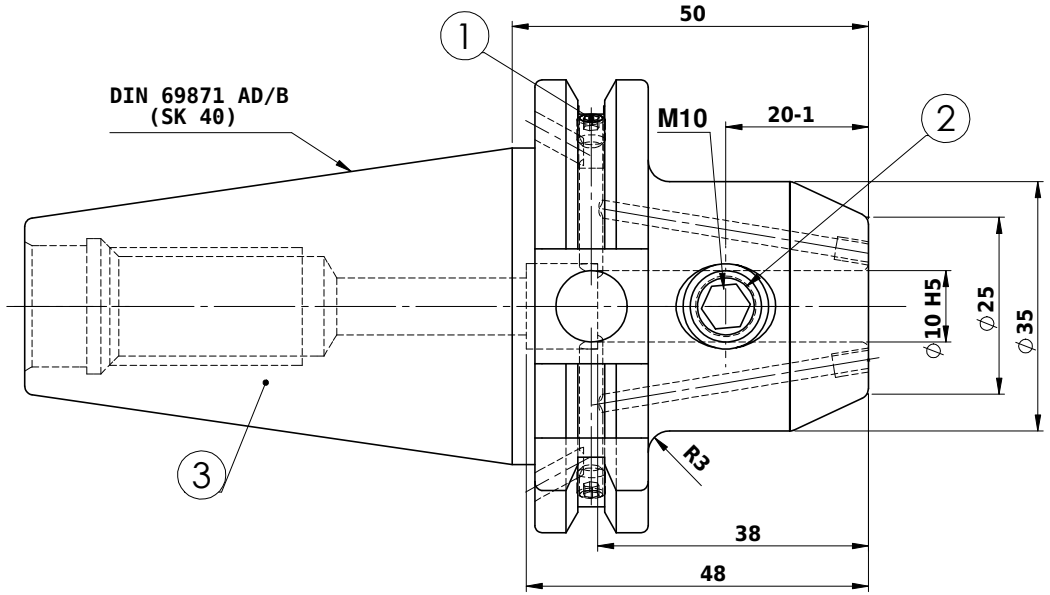

Label :
2002306.1000
WELDON-AUFNAHME MIT KK
WELD.HOLDER COOL.CHANNEL
DIN69871 SK40 ADB
Wk 10 mm x 50 mm
G6.3 / 15000

NOTE :

BALANCING 6.3G AT 15000 RPM

WEIGHT : 1.2 kg

MARKING : DIN 69871 AD/B SK40 WK10H50
G6.3 15000 U/MIN

ITEM NO.	PART NUMBER	DESCRIPTION	QTY.
1	BO	GRUB SCREW M4X4	2
2	B.O.	GS-M10X12-DIN1835-B	1
3	SK40 EK 10 050 FTC WW.	END MILL HOLDER	1
4	BO	M3X4	2

μ m	0.012	0.025	0.05	0.1	0.2	0.4	0.8	1.6	3.2	6.3	12.5	25	50
GRADES		N1	N2	N3	N4	N5	N6	N7	N8	N9	N10	N11	N12
SYMBOLS													

TOLERANCE FREE DIMENSIONS TOLERANCE		
Dimns.	Dia	Length
0.5 to 3	± 0.05	± 0.10
3 to 6	± 0.10	± 0.15
6 to 30	± 0.15	± 0.20
30 to 120	± 0.20	± 0.25
120 to 500	± 0.30	± 0.50

MATERIALS: 16MnCr5

2014	NAME	DATE
DRAWN	RPA	28/07
CHECKED	RVL	28/07
APPROVED		-
SCALE : NTS	QTY. :	

PART NAME: END MILL HOLDER

WEMAG
2002306.1000

DRAWING No. **SK40 EK 10 050 FTC WW.**

REV. 00