Rev.No.	Ch.Let	Alterations	Date	Sign.	Appd.

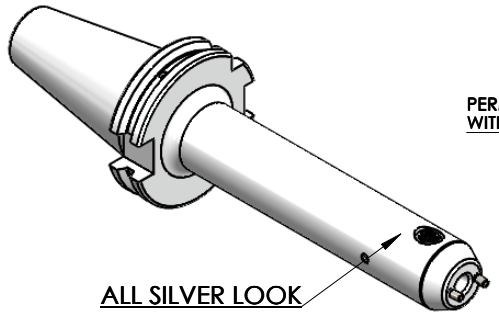

All Dimensions are in MM

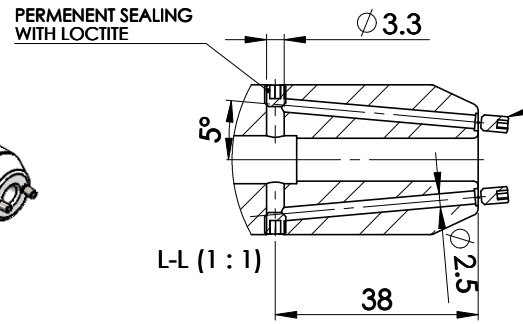

SCREWS TO BE PACKED SEPERATELY
IN PLASTIC POUCH WITH LABEL & PUT INTO
WELDON BORE & THEN SEAL THE HOLDER WITH COVER

LABEL FOR PLASTIC BAGS:
Verschlussschraube
Grub Screw
M3 X 5mm x 1.5 mm

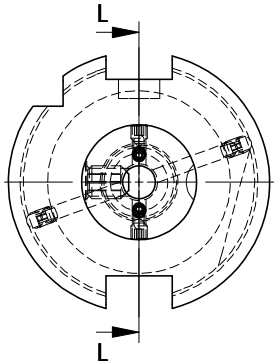

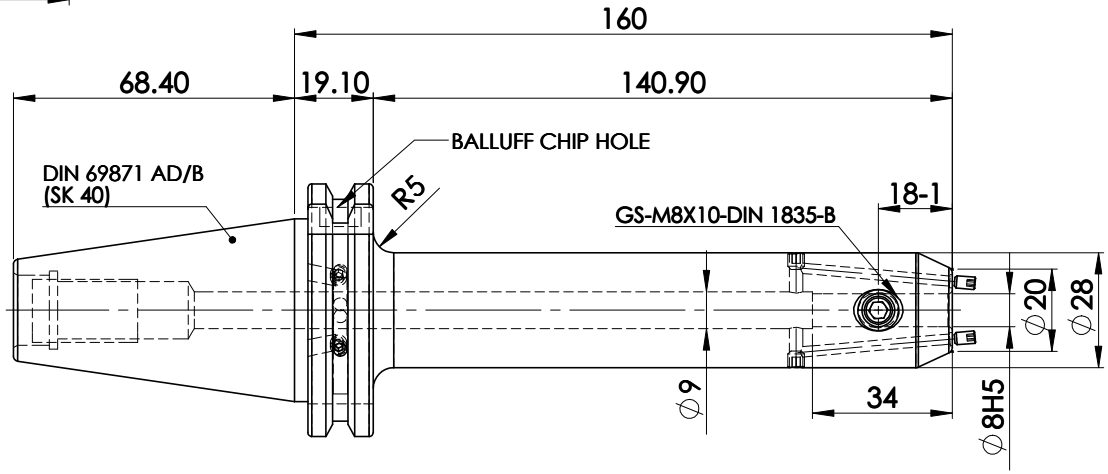

Label :

2002306.0802
WELDON-AUFNAHME MIT KK
WELD.HOLDER COOL.CHANNEL
DIN69871 SK40 ADB
WK 8 mm x 160 mm
G2.5 / 25000 U/MIN

MARKING : DIN 69871 AD/B SK40 WK08H160
G2.5 25000 U/MIN

NOTE :

BALANCING 2.5G AT 25000 RPM

WEIGHT : 1.38 kg

ITEM NO.	PART NUMBER	DESCRIPTION	QTY
1	FWS409H-EKH08160	SK40EK08160FWW	1
2	GS-M8X10DIN 1835-B	GRUB SCREW (B.O.)	1
3	GS -M4 x 4	GRUB SCREW(B.O.)	4
4	GS- M3 x 5	GRUB SCREW(B.O.)	2

μ m	0.012	0.025	0.05	0.1	0.2	0.4	0.8	1.6	3.2	6.3	12.5	25	50
GRADES		N1	N2	N3	N4	N5	N6	N7	N8	N9	N10	N11	N12
SYMBOLS													

TOLERANCE
FREE DIMENSIONS TOLERANCE

Dimns.	Dia	Length
0.5 to 3	± 0.05	± 0.10
3 to 6	± 0.10	± 0.15
6 to 30	± 0.15	± 0.20
30 to 120	± 0.20	± 0.25
120 to 500	± 0.30	± 0.50

MATERIALS: 16MnCr5

2019	NAME	DATE
DRAWN	PGK	20/06
CHECKED	RVL	20/06
APPROVED		
SCALE : 2:1	QTY. :	

PART NAME: SK40EK08160FWW

WEMAG
2002306.0802

DRAWING No. FWS409H-EKH08160

REV. 00