Rev.No.	Ch.Let	Alterations	Date	Sign.	Appd.

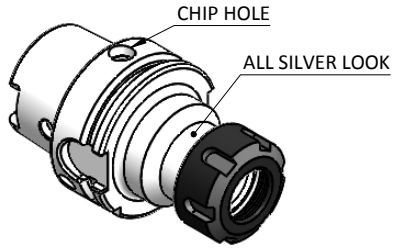

All Dimensions are in MM

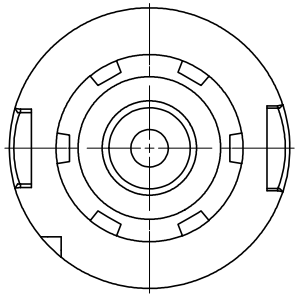

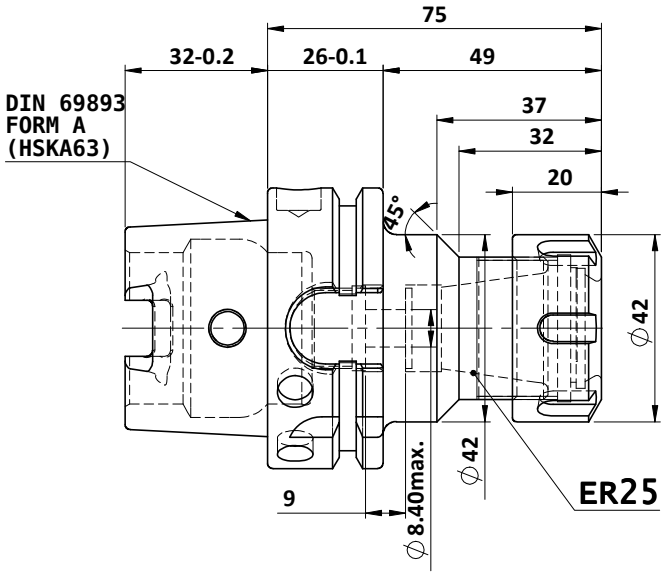

LABEL :

2002269.0500
SPANNZANGENAUFNAHME ER COLLET CHUCK

MARKING : DIN 69893 A HSK63A CCHER25 H075

BALANCING 2.5G AT 25000 RPM

WEIGHT : 0.84 Kg

ITEM NO.	PART NUMBER	DESCRIPTION	QTY.
1	FWA063H-ERS25075	HSKA63CCHER25075WW	1
2	NUTER25	COLLET NUT	1

μ m	0.012	0.025	0.05	0.1	0.2	0.4	0.8	1.6	3.2	6.3	12.5	25	50
GRADES		N1	N2	N3	N4	N5	N6	N7	N8	N9	N10	N11	N12
SYMBOLS													

TOLERANCE		
FREE DIMENSIONS TOLERANCE		
Dimns.	Dia	Length
0.5 to 3	± 0.05	± 0.10
3 to 6	± 0.10	± 0.15
6 to 30	± 0.15	± 0.20
30 to 120	± 0.20	± 0.25
120 to 500	± 0.30	± 0.50

MATERIALS: 16MnCr5

2019	NAME	DATE
DRAWN	MVP	25/06
CHECKED	RVL	25/06
APPROVED		
SCALE : NTS	QTY. :	

WEMAG
2002269.0500

PART NAME: HSKA63CCHER25075WW

DRAWING No. FWA063H-ERS25075

REV. 00