Rev.No.	Ch.Let	Alterations	Date	Sign.	Appd.

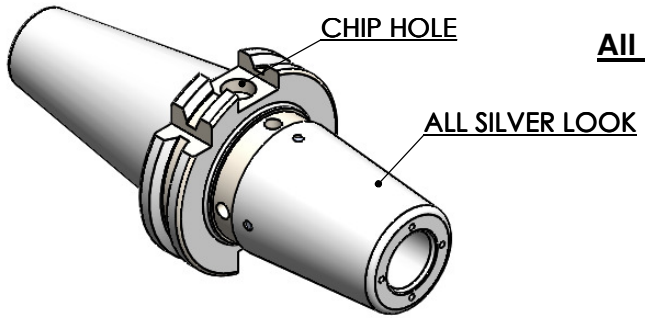

All Dimensions are in MM

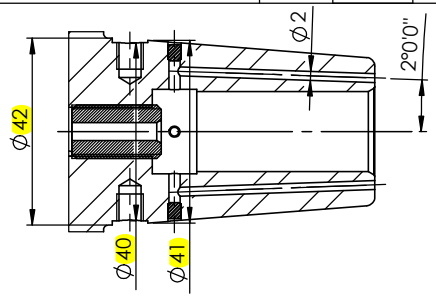

SECTION A-A

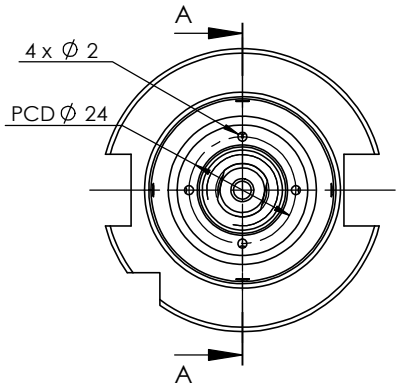

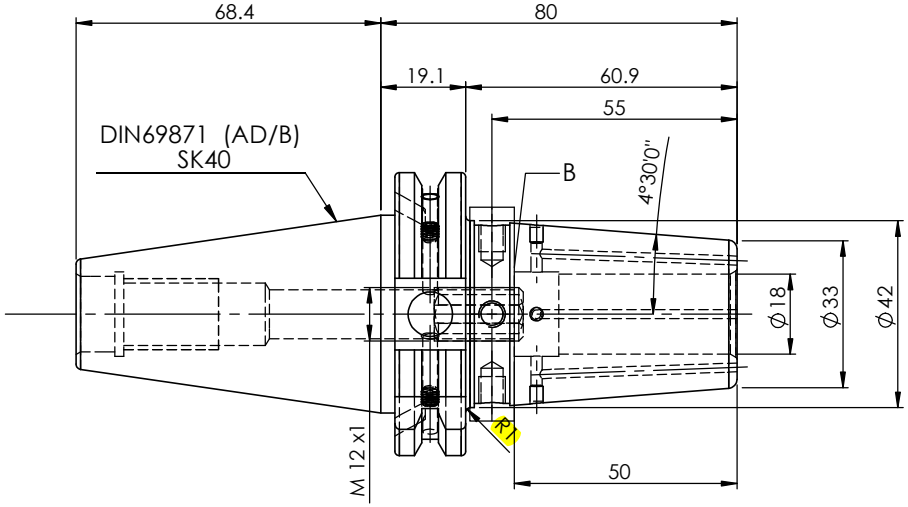

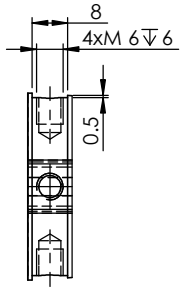

DETAIL B

LABEL :
2002266.1800
SCHRUMPFFUTTER MIT KK
SHRINK FIT HOLDER COOLANT CHANNEL
ISO 7388-1 (DIN69871) SK40 AD/AF (AD+B)
SR4 18mm X 080mm
G2,5/25000 U/MIN

NOTE :

BALANCING 2.5G@ 25000 RPM

Weight : 1.2 Kg

MARKING : ISO 7388-1 (DIN69871) SK40 AD/AF (AD+B) SFHC18H080
G2,5/25000 U/MIN

ITEM NO.	PART NUMBER	DESCRIPTION	QTY.
1	F1S409H-SFK18080	SK40SFK18080FWW	1
2	SCWM16X1X12-FLAT	STOPPER SCREW-(B.O.)	1
3	GS-M4X4	GRUB SCREW	2
4	EXPANDER PLUG-22880.0053	EXPANDER PLUG-Ø3x3.6mm	4

μ m	0.012	0.025	0.05	0.1	0.2	0.4	0.8	1.6	3.2	6.3	12.5	25	50
GRADES	N1	N2	N3	N4		N5	N6	N7	N8	N9	N10	N11	N12
SYMBOLS	▽▽▽▽					▽▽▽		▽▽			▽		~

TOLERANCE		
FREE DIMENSIONS TOLERANCE		
Dimns.	Dia	Length
0.5 to 3	± 0.05	± 0.10
3 to 6	± 0.10	± 0.15
6 to 30	± 0.15	± 0.20
30 to 120	± 0.20	± 0.25
120 to 500	± 0.30	± 0.50

MATERIALS: HDS

2022	NAME	DATE
DRAWN	SVR	29/01
CHECKED	RVL	29/01
APPROVED		
SCALE : NTS	QTY. :	

PART NAME: **SK40SFK18080FWW**

WEMAG
2002266.1800

DRAWING No. F1S409H-SFK18080

REV. 00