Rev.No.	Ch.Let	Alterations	Date	Sign.	Appd.

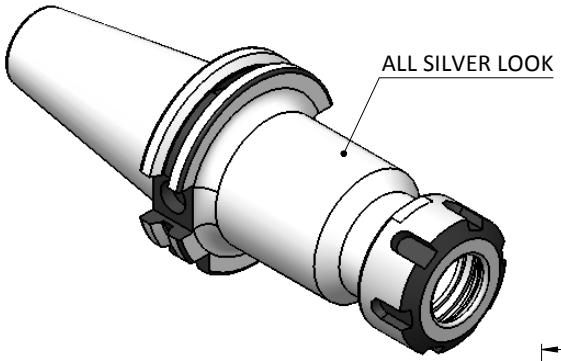

All Dimensions are in MM

CUSTOMER APPROVAL REQUIRED	
APPROVED BY	
DATE	

FOR QUOTATION PURPOSE ONLY

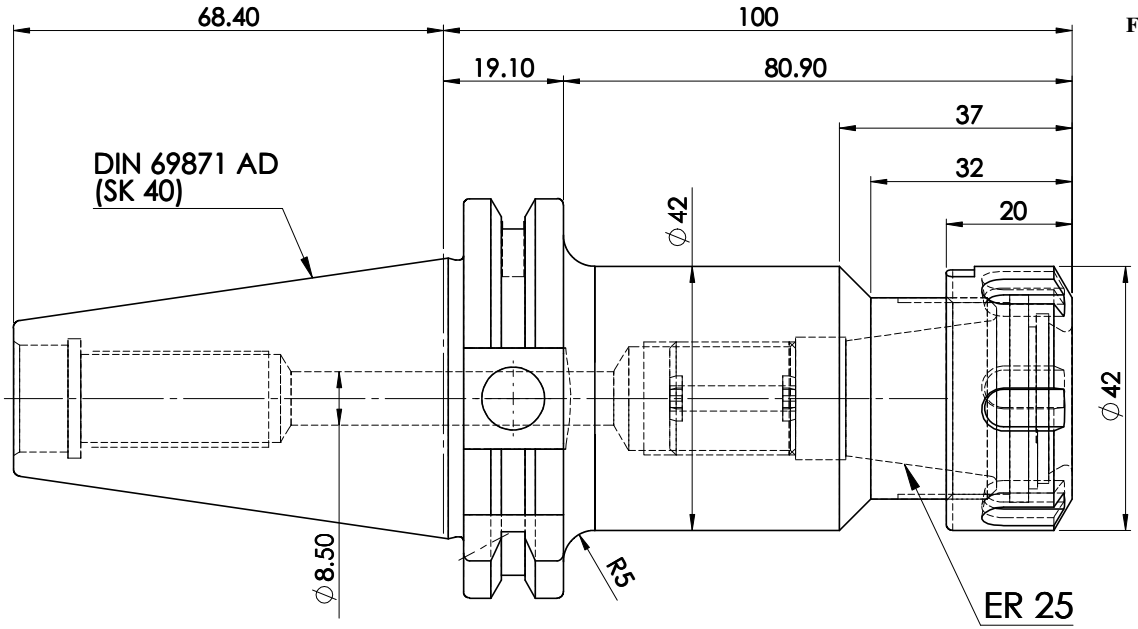

LABEL :

2002261.0501

Spannzangenfutter

ER collet chuck holder

DIN69871 SK40 AD

ER25 x 100 mm

G6.3 / 15000

MARKING : DIN 69871 AD SK40 CCH ER25 H100
G6.3 15000 U/MIN

BALANCING 6.3G @ 15000 RPM

WEIGHT :1.4Kg.

ITEM NO.	PART NUMBER	DESCRIPTION	QTY.
1	SK40CCHER25100WW	COLLET CHUCK HOLDER	1
2	NUTER25	COLLET NUT-(B.O)	1
3	SCWM18X1.5	STOPPER SCREW-(B.O)	1

		μ m	0.012	0.025	0.05	0.1	0.2	0.4	0.8	1.6	3.2	6.3	12.5	25	50
		GRADES		N1	N2	N3	N4	N5	N6	N7	N8	N9	N10	N11	N12
		SYMBOLS													

TOLERANCE		
FREE DIMENSIONS TOLERANCE		
Dimns.	Dia	Length
0.5 to 3	± 0.05	± 0.10
3 to 6	± 0.10	± 0.15
6 to 30	± 0.15	± 0.20
30 to 120	± 0.20	± 0.25
120 to 500	± 0.30	± 0.50

MATERIALS: 16MnCr5

2016	NAME	DATE
DRAWN	MHP	05/09
CHECKED	RVL	05/09
APPROVED		05/09
SCALE : 2:1	QTY. :	

PART NAME: SK40CCHER25100WW

WEMAG
2002261.0501

DRAWING No. FWS401A-ERS25100

REV. 00