Rev.No.	Ch.Let	Alterations	Date	Sign.	Appd.

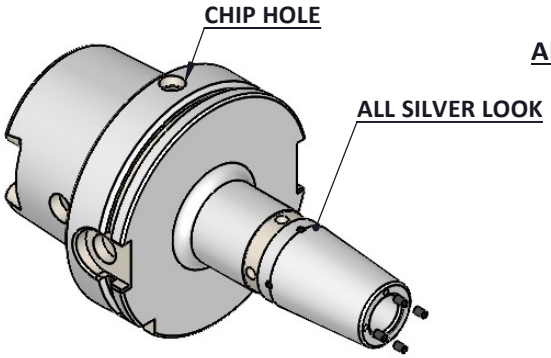

All Dimensions are in MM

For Customer Approval

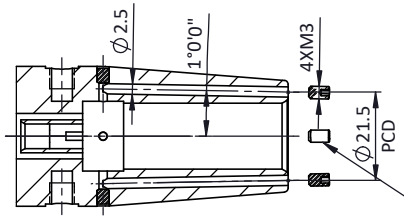

SECTION A-A

SCREWS TO BE PACKED SEPERATELY IN PLASTIC POUCH WITH LABEL & PUT INTO BORE & THEN SEAL THE HOLDER WITH COVER

LABEL FOR PLASTIC BAGS:
Verschlussschraube
Grub Screw
M3 X 5mm X1.5mm

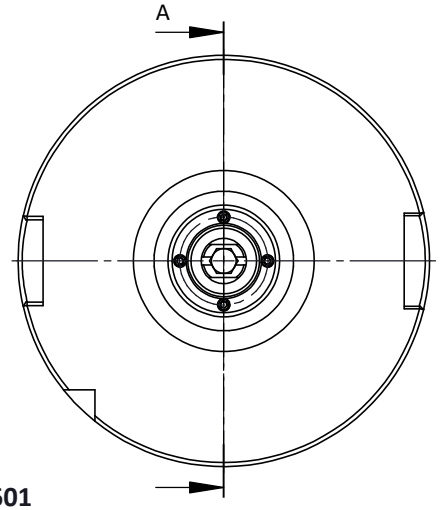

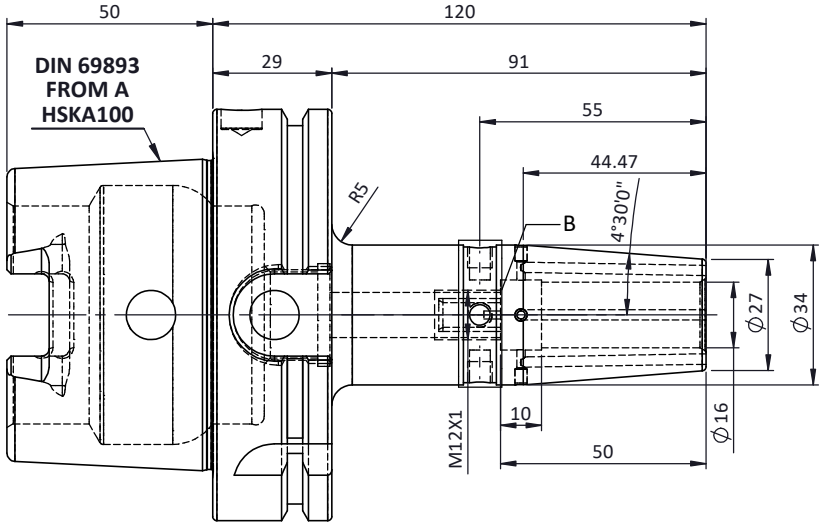

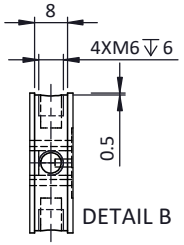

DETAIL B

LABEL :
2002387.1601
SCHRUMPFFUTTER MIT KK
SHRINK FIT HOLDER COOLANT CHANNEL
DIN69893 HSK100A
SR5 16mm X 120mm
G2,5/25000 U/MIN

MARKING : DIN69893 A HSK100A SFHC16H120
G2,5/25000 U/MIN

Notes	
Balancing Value	G2.5 @25000RPM
Approx Weight	2.7Kg

		μm	0.012	0.025	0.05	0.1	0.2	0.4	0.8	1.6	3.2	6.3	12.5	25	50
		GRADES		N1	N2	N3	N4	N5	N6	N7	N8	N9	N10	N11	N12
		SYMBOLS													

TOLERANCE		
FREE DIMENSIONS TOLERANCE		
Dimns.	Dia	Length
0.5 to 3	±0.05	±0.10
3 to 6	±0.10	±0.15
6 to 30	±0.15	±0.20
30 to 120	±0.20	±0.25
120 to 500	±0.30	±0.50

MATERIALS: HDS

2022	NAME	DATE
DRAWN	SVR	16/04
CHECKED	RVL	16/04
APPROVED		
SCALE : NTS	QTY. :	

2002387.1601

PART NAME: **HSKA100SFK16120WW**

DRAWING No. F1A100H-SFK16120

REV. 00

ITEM NO.	PART NUMBER	DESCRIPTION	QTY.
4	EXPANDER PLUG	EXPANDER PLUG-Ø3x3.6mm	4
3	GS-M3X5	GRUB SCREW	4
2	SCWM12X1X15-FS	STOPPER SCREW	1
1	F1A100H-SFK16120	HSKA100SFK16120WW	1