Rev.No.	Ch.Let	Alterations	Date	Sign.	Appd.

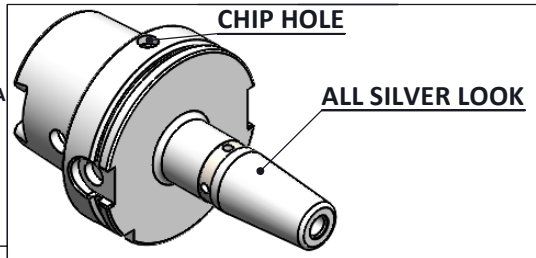

All Dimensions are in MM

For Customer Approval

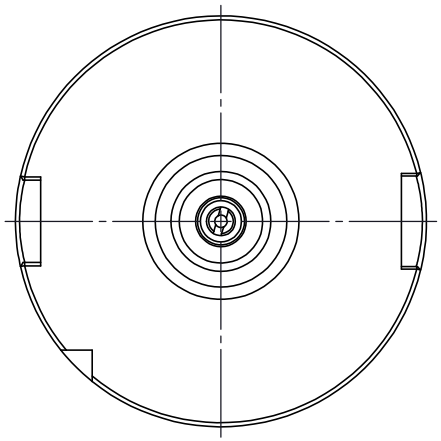

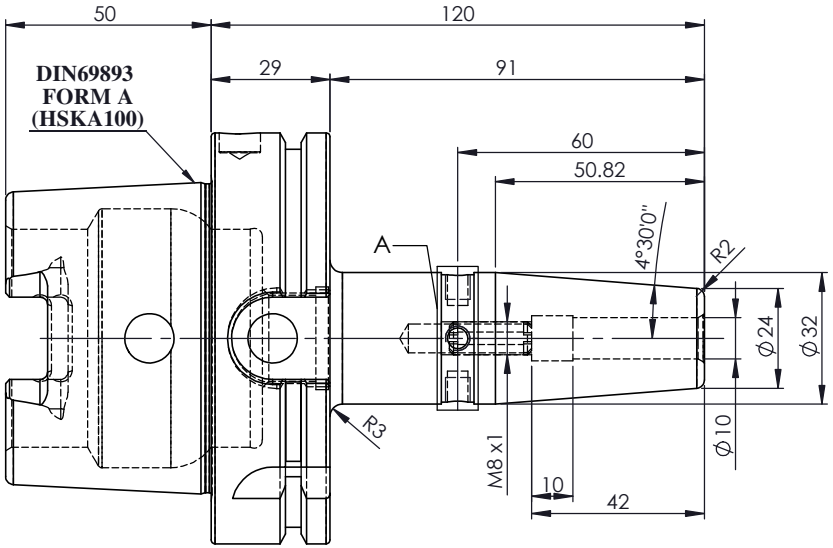

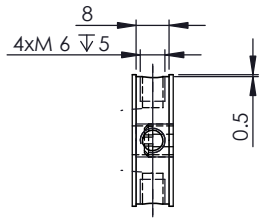

DETAIL A
SCALE 1 : 1.3

LABEL :

2002386.1001
SCHRUMPFFUTTER
SHRINK FIT HOLDER
DIN69893 HSK100A
SR 10mm X 120mm
G2,5/25000 U/MIN

MARKING : DIN69893 HSK100A SR10 H120
G2,5/25000 U/MIN

Notes	
Balancing Value	G2.5 @25000RPM
Approx Weight	2.4Kg

μ m	0.012	0.025	0.05	0.1	0.2	0.4	0.8	1.6	3.2	6.3	12.5	25	50
GRADES	N1		N2	N3	N4	N5	N6	N7	N8	N9	N10	N11	N12
SYMBOLS	▽▽▽▽					▽▽▽		▽▽			▽		~

TOLERANCE		
FREE DIMENSIONS TOLERANCE		
Dimns.	Dia	Length
0.5 to 3	± 0.05	± 0.10
3 to 6	± 0.10	± 0.15
6 to 30	± 0.15	± 0.20
30 to 120	± 0.20	± 0.25
120 to 500	± 0.30	± 0.50

MATERIALS:
HDS

2024	NAME	DATE
DRAWN	SVR	26/03
CHECKED	RVL	26/03
APPROVED		
SCALE : NTS	QTY. :	

PART NAME:
HSKA100SFC10120WW

2002386.1001

DRAWING No. F1A100H-SFC10120

REV. 00

ITEM NO.	PART NUMBER	DESCRIPTION	QTY.
2	SCWM8x1X20	STOPPER SCREW	1
1	F1A100H-SFC10120	HSKA100SFC10120	1