Rev.No.	Ch.Let	Alterations	Date	Sign.	Appd.

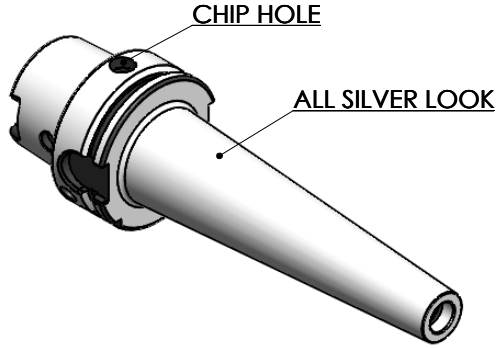

All Dimensions are in MM

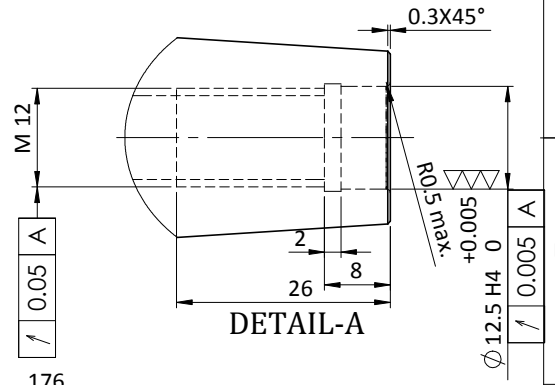

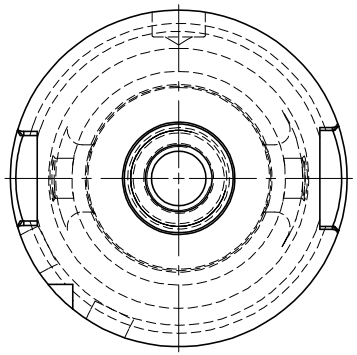

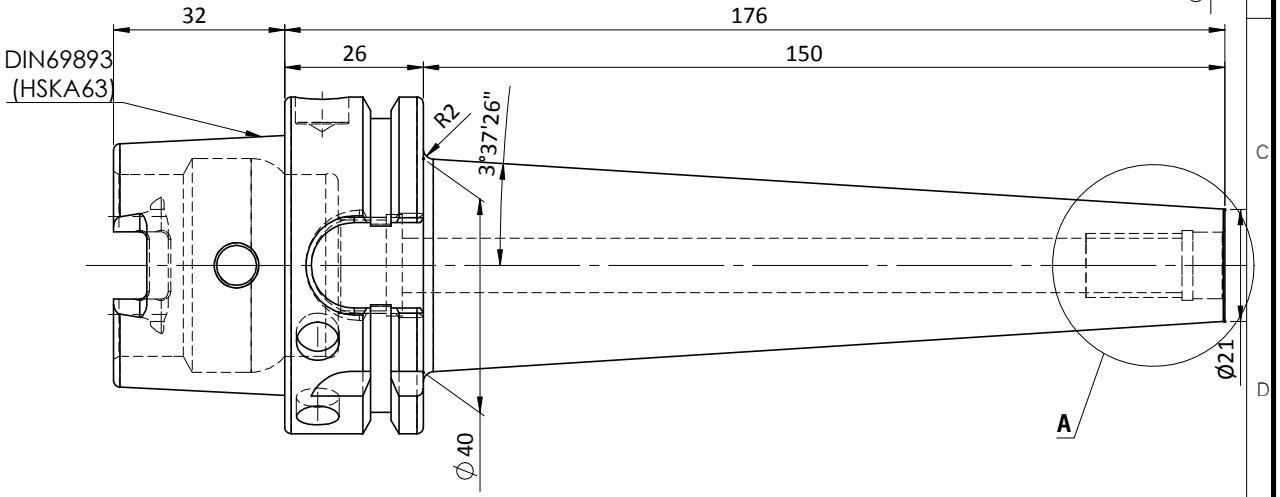

LABEL:

2002382.1202
EINSCHRAUBFRÄSERAUFNAHME
SCREW-ON HOLDER
DIN 69893 A HSK63A
ES M12 x 150 mm x 176 mm
G2,5 / 25000 U/MIN

MARKING: DIN 69893 A HSK63A M12 X 150mm
G2,5 25000 U/MIN

NOTE:

BALANCING 2.5 G @ 25000 RPM

WEIGHT : 1.40 Kg

		μm	0.012	0.025	0.05	0.1	0.2	0.4	0.8	1.6	3.2	6.3	12.5	25	50
		GRADES		N1	N2	N3	N4	N5	N6	N7	N8	N9	N10	N11	N12
		SYMBOLS													~

TOLERANCE		
FREE DIMENSIONS TOLERANCE		
Dimns.	Dia	Length
0.5 to 3	±0.05	±0.10
3 to 6	±0.10	±0.15
6 to 30	±0.15	±0.20
30 to 120	±0.20	±0.25
120 to 500	±0.30	±0.50

MATERIALS: 16MnCr5

2023	NAME	DATE
DRAWN	ESK	03/02
CHECKED	RVL	03/02
APPROVED		

SCALE : NTS QTY. :

2002382.1202

PART NAME: HSKA63TMH12176WW

DRAWING No. FWA063H-TMH12176

REV. 00