Rev.No.	Ch.Let	Alterations	Date	Sign.	Appd.

All Dimensions are in MM

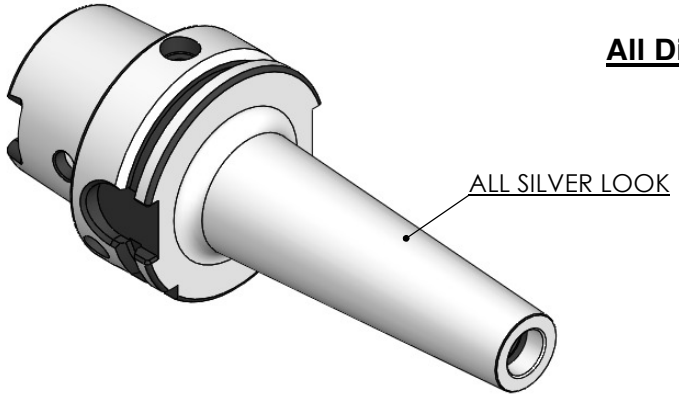

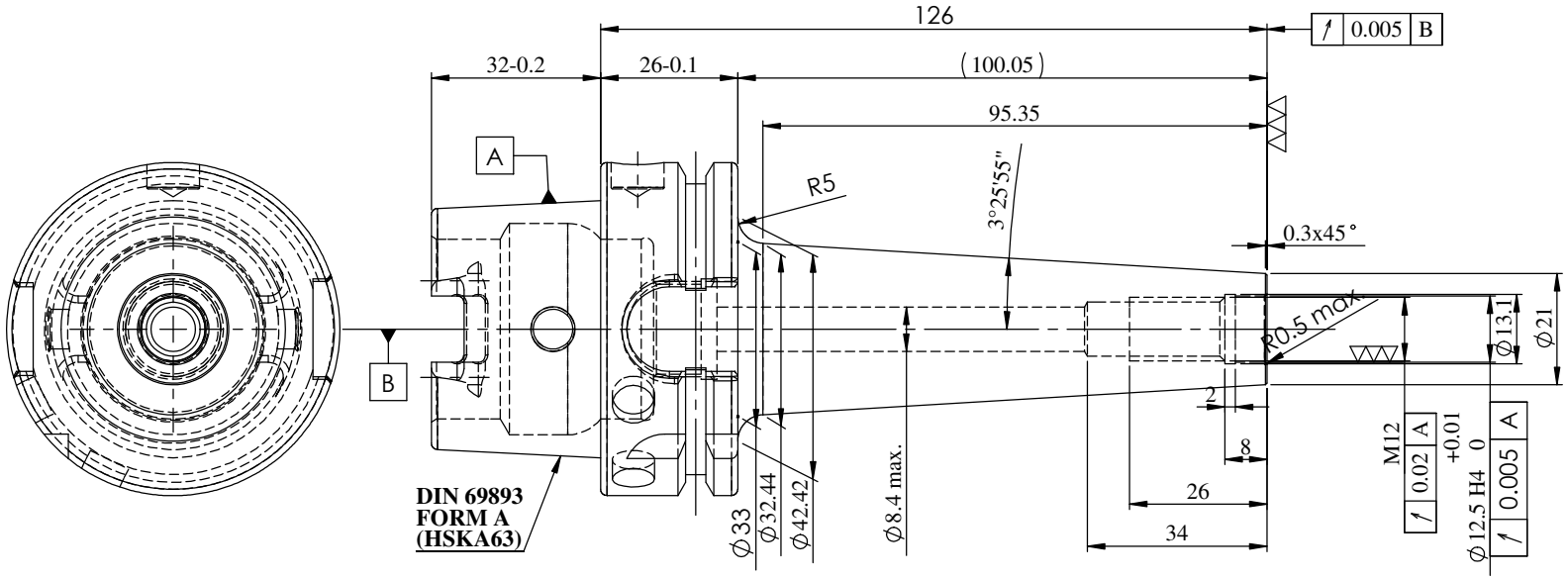

BALANCING 2.5G @ 25000 RPM

WT : 0.89 Kg

LABEL:-

2002382.1201
EINSCHRAUBFRÄSERAUFNAHME
SCREW-ON HOLDER
DIN 69893A HSK63A
ES M12 x 100 mm x 126 mm
G2,5 / 25000

MARKING:- DIN 69893A HSK63A M12 X 100mm G2,5 25000

μ m	0.012	0.025	0.05	0.1	0.2	0.4	0.8	1.6	3.2	6.3	12.5	25	50
GRADES		N1	N2	N3	N4	N5	N6	N7	N8	N9	N10	N11	N12
SYMBOLS													

TOLERANCE		
FREE DIMENSIONS TOLERANCE		
Dimns.	Dia	Length
0.5 to 3	± 0.05	± 0.10
3 to 6	± 0.10	± 0.15
6 to 30	± 0.15	± 0.20
30 to 120	± 0.20	± 0.25
120 to 500	± 0.30	± 0.50

MATERIALS: 16MnCr5

2020	NAME	DATE
DRAWN	PGK	25/06
CHECKED	RVL	25/06
APPROVED		
SCALE : NTS	QTY. :	

2002382.1201

PART NAME: HSKA63TMH12126WW

DRAWING No. FWA063H-TMH12126

REV. 00