| Rev.No. | Ch.Let | Alterations | Date | Sign. | Appd. |
|---|---|---|---|---|---|
| | | | | | |
| | | | | | |
| | | | | | |

**All Dimensions are in MM**

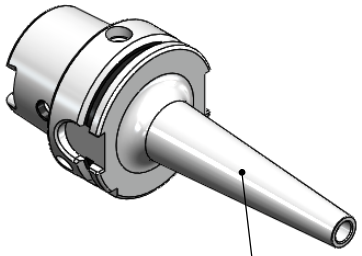

ALL SILVER LOOK

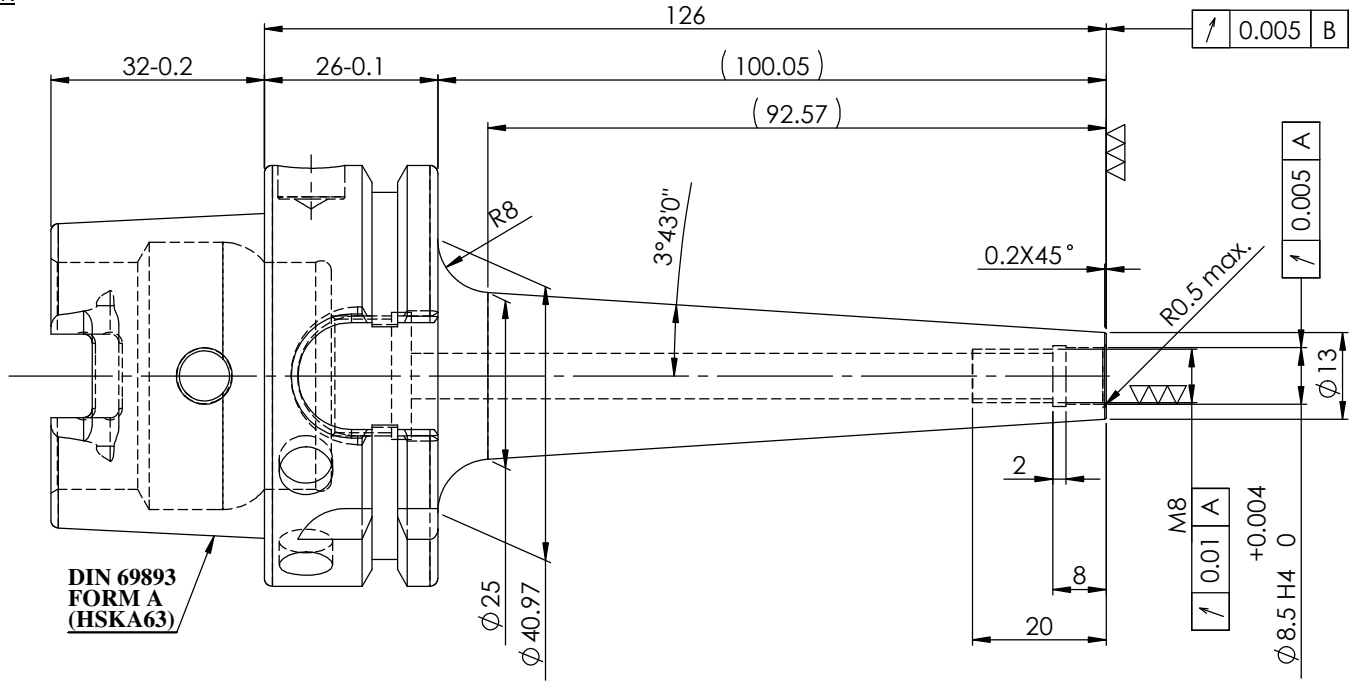


LABEL:-

**2002382.0801**
EINSCHRAUBFRÄSERAUFNAHME
SCREW-ON HOLDER
DIN 69893A HSK63A
ES M10 x 100 mm x 126 mm
G2,5 / 25000

MARKING:- DIN 69893A HSK63A M10 X 100mm
G2,5 25000

BALANCING 2.5G@25000 RPM

| | | | | | | | | | | | | | | | | | |
|---|---|---|---|---|---|---|---|---|---|---|---|---|---|---|---|---|---|
| | | μ m | 0.012 | 0.025 | 0.05 | 0.1 | 0.2 | 0.4 | 0.8 | 1.6 | 3.2 | 6.3 | 12.5 | 25 | 50 |
| | | GRADES | | N1 | N2 | N3 | N4 | N5 | N6 | N7 | N8 | N9 | N10 | N11 | N12 |
| | | SYMBOLS | | | | | | | | | | | | | ~ |

| TOLERANCE | | |
|---|---|---|
| FREE DIMENSIONS TOLERANCE | | |
| Dimns. | Dia | Length |
| 0.5 to 3 | ± 0.05 | ± 0.10 |
| 3 to 6 | ± 0.10 | ± 0.15 |
| 6 to 30 | ± 0.15 | ± 0.20 |
| 30 to 120 | ± 0.20 | ± 0.25 |
| 120 to 500 | ± 0.30 | ± 0.50 |

MATERIALS: 16MnCr5

| 2019 | NAME | DATE |
|---|---|---|
| DRAWN | PGK | 31/07 |
| CHECKED | RVL | 31/07 |
| APPROVED | | |
| SCALE : NTS | QTY. : | |

**2002382.0801**

PART NAME: HSKA63TMH08126WW

DRAWING No. FWA036H-TMH08126

REV. 00