Rev.No.	Ch.Let	Alterations	Date	Sign.	Appd.

All Dimensions are in MM

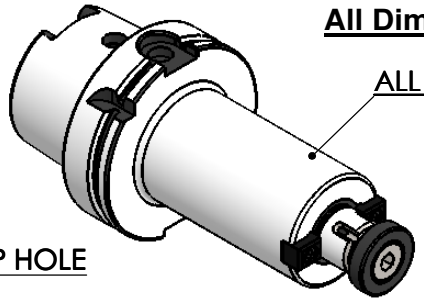

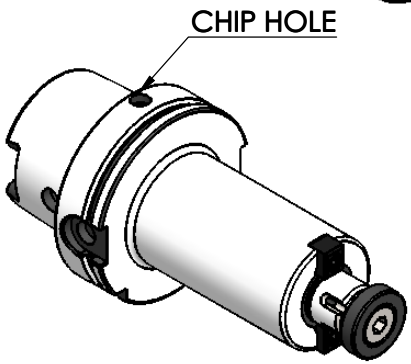

CUSTOMER APPROVAL REQUIRED	
APPROVED BY	
DATE	

FOR QUOTATION PURPOSE ONLY

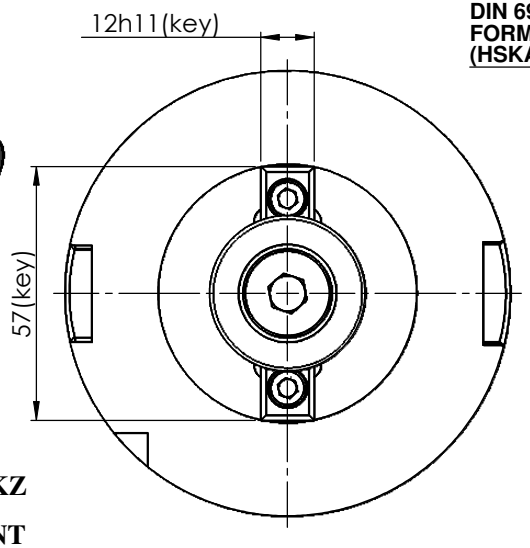

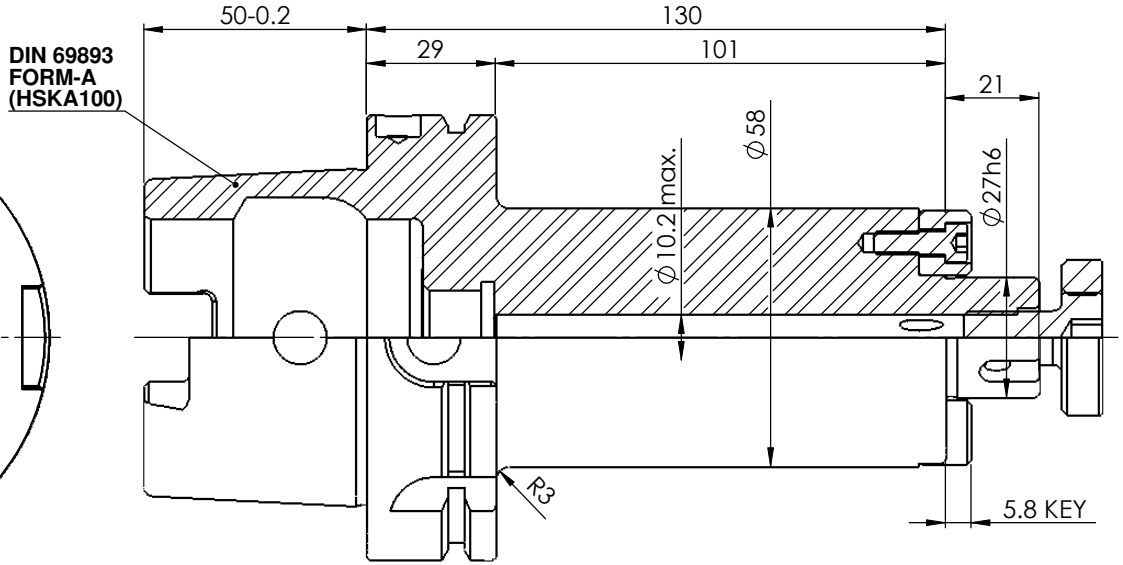

LABEL :

2002381.2705

AUFSTECKFRÄSDORN MIT IKZ

FACE MILL HOLDER COOLANT

DIN69893 HSK100A

AS 27 mm x 130 mm

G2,5 / 25000

MARKING : DIN 69893 A HSK100 D27H130 IKZ G2.5 25000 U/MIN

WEIGHT :4.06 Kg.

BALANCING 2.5G @ 25000 RPM

ITEM NO.	PART NUMBER	DESCRIPTION	QTY
1	FWA100H-SMX27130	HSKA100SMS27130TCWW	1
2	CCS-M12-27	CUTTER CLAMPING SCREW	1
3	KEY 12x14.5x12 - 27	DRIVING KEY	2
4	AS-M5x16	ALLEN SCREW (B.O.)	2

μ m	0.012	0.025	0.05	0.1	0.2	0.4	0.8	1.6	3.2	6.3	12.5	25	50
GRADES		N1	N2	N3	N4	N5	N6	N7	N8	N9	N10	N11	N12
SYMBOLS													

TOLERANCE		
FREE DIMENSIONS TOLERANCE		
Dimns.	Dia	Length
0.5 to 3	± 0.05	± 0.10
3 to 6	± 0.10	± 0.15
6 to 30	± 0.15	± 0.20
30 to 120	± 0.20	± 0.25
120 to 500	± 0.30	± 0.50

MATERIALS: 16Mncr5

2017	NAME	DATE
DRAWN	KSK	18/08
CHECKED	RVL	18/08
APPROVED		
SCALE : NTS	QTY. :	

2002381.2705

PART NAME: HSKA100SMS27130TCWW

DRAWING No. FWA100H-SMX27130

REV. 00