Rev.No.	Ch.Let	Alterations	Date	Sign.	Appd.

All Dimensions are in MM

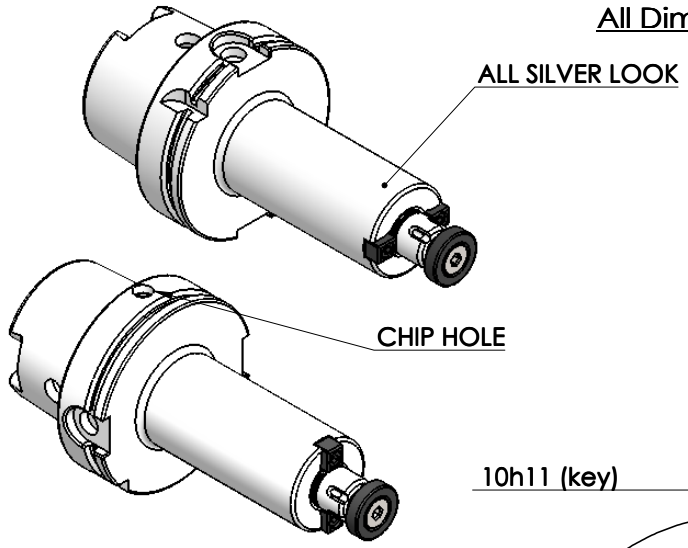

CUSTOMER APPROVAL REQUIRED	
APPROVED BY	
DATE	

FOR QUOTATION PURPOSE ONLY

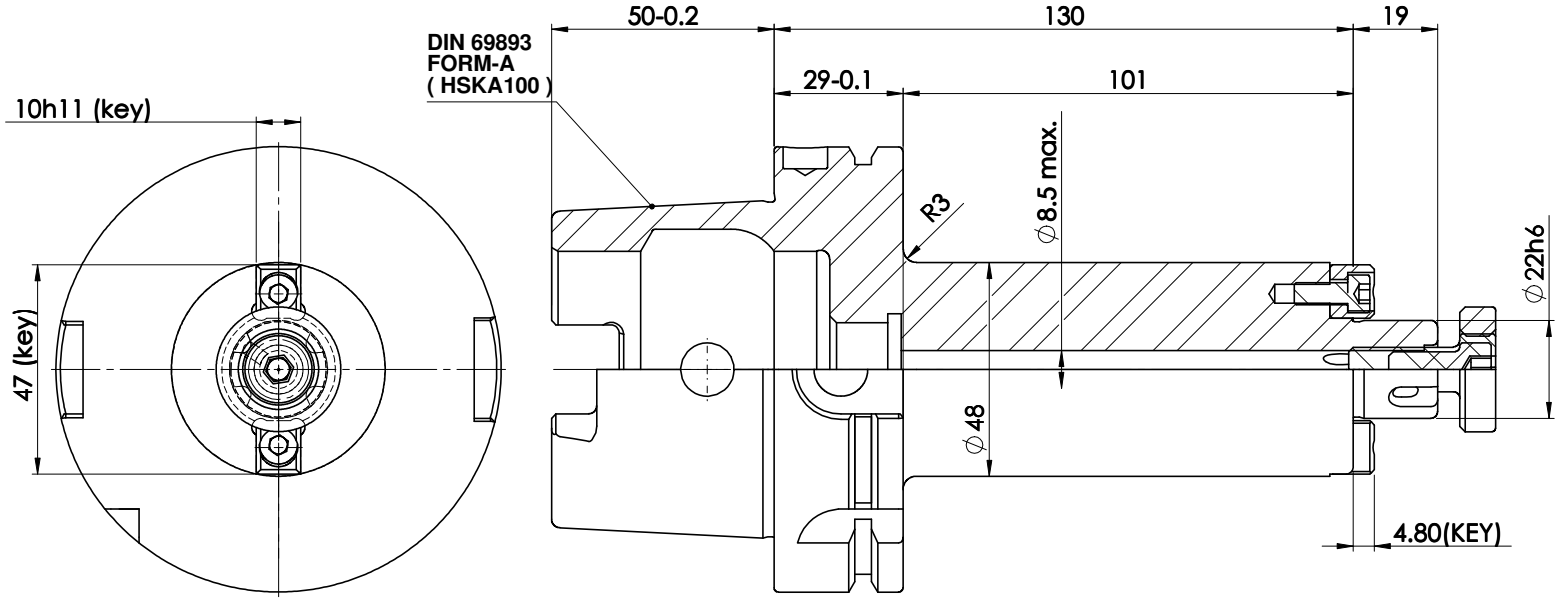

LABEL :

2002381.2205

AUFSTECKFRÄSDORN MIT IKZ

FACE MILL HOLDER COOLANT

DIN69893 HSK100A

AS 22 mm x 130 mm

G2.5 / 15000

MARKING : DIN 69893 A HSK100 D22H1301KZ

G2.5 15000 U/MIN

WEIGHT : 3.40 Kg.

BALANCING 2.5G @ 25000 RPM

ITEM NO.	PART NUMBER	DESCRIPTION	QTY
1	FWA100H-SMX22130	HSKA100SMS22130TCWW	1
2	KEY 10x12x10 - 22	DRIVING KEY	2
3	AS-M5X12	ALLEN SCREW-(B.O)	2
4	CCS-M10-22	CUTTER CLAMPING SCREW	1

μ m	0.012	0.025	0.05	0.1	0.2	0.4	0.8	1.6	3.2	6.3	12.5	25	50
GRADES		N1	N2	N3	N4	N5	N6	N7	N8	N9	N10	N11	N12
SYMBOLS													

TOLERANCE		
FREE DIMENSIONS TOLERANCE		
Dimns.	Dia	Length
0.5 to 3	± 0.05	± 0.10
3 to 6	± 0.10	± 0.15
6 to 30	± 0.15	± 0.20
30 to 120	± 0.20	± 0.25
120 to 500	± 0.30	± 0.50

MATERIALS: 16MnCr5

2017	NAME	DATE
DRAWN	KSK	18/08
CHECKED	RVL	18/08
APPROVED		
SCALE : 2:1	QTY. :	

2002381.2205

PART NAME: HSKA100SMS22130TCWW

DRAWING No. FWA100H-SMX22130

REV. 00