Rev.No.	Ch.Let	Alterations	Date	Sign.	Appd.

CUSTOMER APPROVAL REQUIRED	
APPROVED BY	
DATE	

FOR QUOTATION PURPOSE ONLY

All Dimensions are in MM

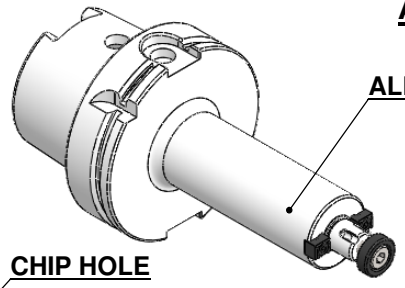

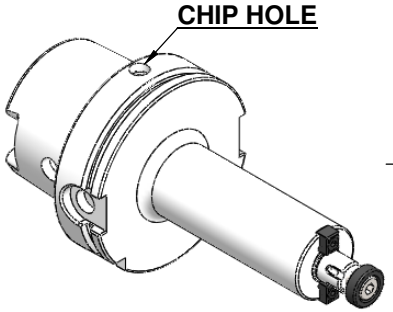

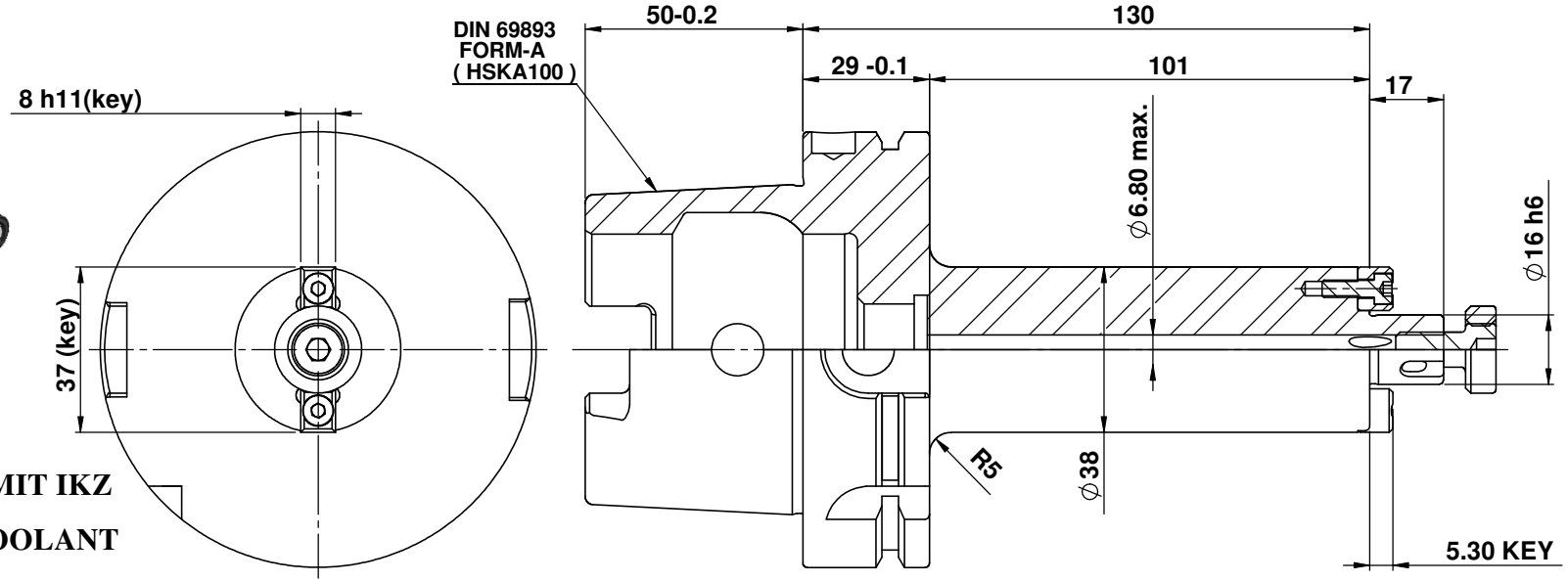

LABEL :

2002381.1605

AUFSTECKFRÄSDORN MIT IKZ

FACE MILL HOLDER COOLANT

DIN69893 HSK100A

AS 16 mm x 130 mm

G2,5 / 25000

MARKING : DIN 69893 A HSK100 D16H130 IKZ
G2.5 25000 U/MIN

WEIGHT : 2.85 Kg.

BALANCING 2.5G @ 25000 RPM

ITEM NO.	DESCRIPTION	PART NUMBER	QTY.
1	HSKA100SMS16130TCWW	FWA100H-SMX16130	1
2	CUTTER CLAMPING SCREW	CCS-M8-16	1
3	ALLEN SCREW-(B.O.)	AS-M4X12	2
4	DRIVING KEY	KEY 08x10x8-16	2

μ m	0.012	0.025	0.05	0.1	0.2	0.4	0.8	1.6	3.2	6.3	12.5	25	50
GRADES		N1	N2	N3	N4	N5	N6	N7	N8	N9	N10	N11	N12
SYMBOLS													

TOLERANCE FREE DIMENSIONS TOLERANCE		
Dimns.	Dia	Length
0.5 to 3	± 0.05	± 0.10
3 to 6	± 0.10	± 0.15
6 to 30	± 0.15	± 0.20
30 to 120	± 0.20	± 0.25
120 to 500	± 0.30	± 0.50

MATERIALS: 16MnCr5

2017	NAME	DATE
DRAWN	KSK	18/08
CHECKED	RVL	18/08
APPROVED		
SCALE : NTS	QTY. :	

2002381.1605

PART NAME: HSKA100SMS16130TCWW

DRAWING No. FWA100H-SMX16130

REV. 00