Rev.No.	Ch.Let	Alterations	Date	Sign.	Appd.

All Dimensions are in MM

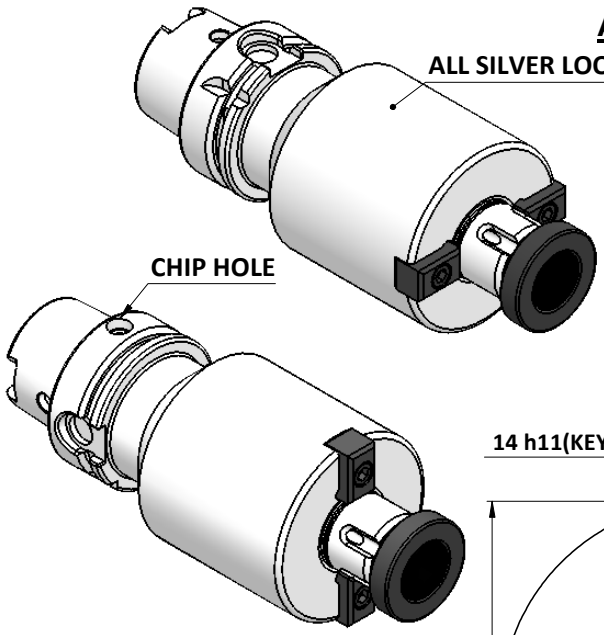

CUSTOMER APPROVAL REQUIRED	
APPROVED BY	
DATE	

FOR QUOTATION PURPOSE ONLY

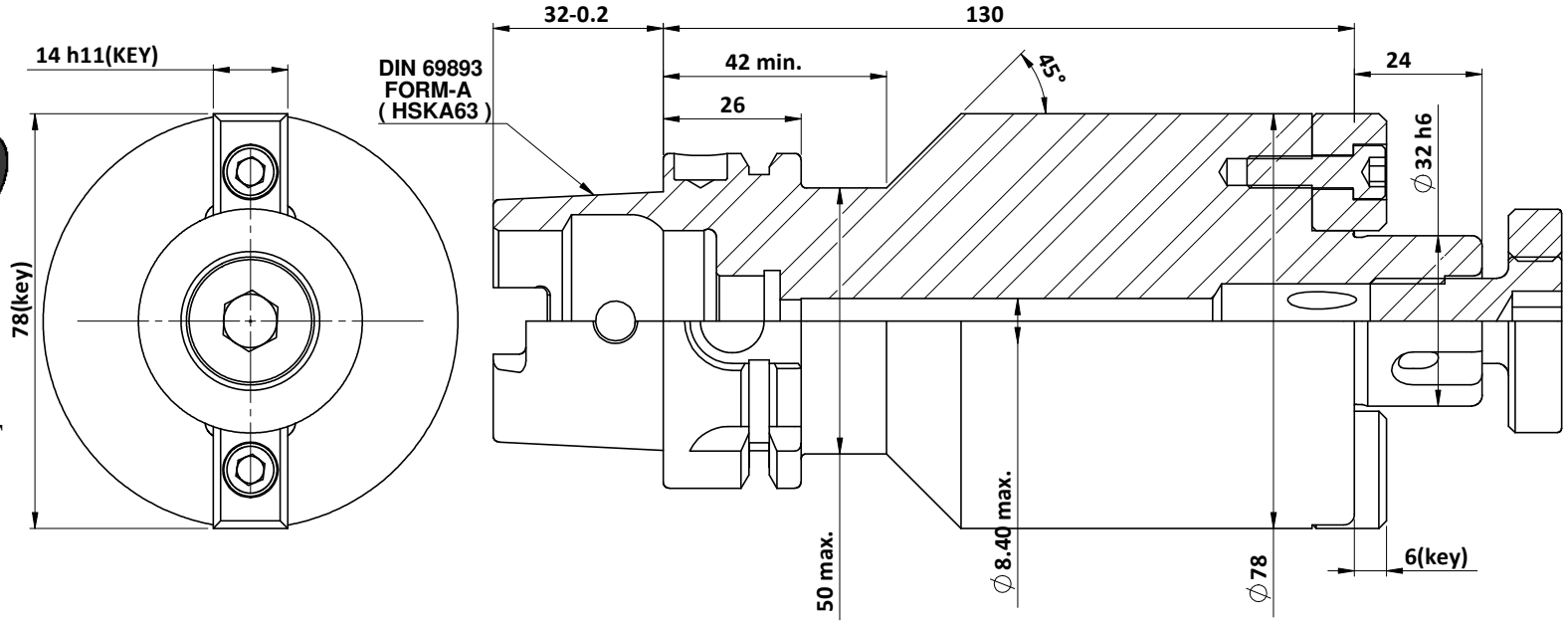

LABEL :

2002380.3205

AUFSTECKFRÄSDORN MIT IKZ

FACE MILL HOLDER COOLANT

DIN69893 HSK63A

AS 32 mm x 130 mm

G2,5 / 25000

MARKING :
DIN 69893 A HSK63 D32 H130 IKZ
G2.5 25000 U/MIN

BALANCING 2.5G @ 25000 RPM

WEIGHT :3.99 Kg.

ITEM NO.	PART NUMBER	DESCRIPTION	QTY
1	FWA063H-SMX32130	HSKA63SMS32100TCWW	1
2	CCS-M16-32	CUTTER CLAMPING SCREW	1
3	KEY 14x22x14 - 32	DRIVING KEY	2
4	AS-M6X20	ALLEN SCREW-(B.O.)	2

μ m	0.012	0.025	0.05	0.1	0.2	0.4	0.8	1.6	3.2	6.3	12.5	25	50
GRADES	N1		N2	N3	N4	N5	N6	N7	N8	N9	N10	N11	N12
SYMBOLS													

TOLERANCE		
FREE DIMENSIONS TOLERANCE		
Dimns.	Dia	Length
0.5 to 3	± 0.05	± 0.10
3 to 6	± 0.10	± 0.15
6 to 30	± 0.15	± 0.20
30 to 120	± 0.20	± 0.25
120 to 500	± 0.30	± 0.50

MATERIALS: 16Mncr5

2017	NAME	DATE
DRAWN	PK	18/08
CHECKED	RVL	18/08
APPROVED		
SCALE : NTS	QTY. :	

2002380.3205

PART NAME: HSKA63 SMS 32 130 TC WW

DRAWING No. FWA063H-SMX32130

REV. 00