Rev.No.	Ch.Let	Alterations	Date	Sign.	Appd.

All Dimensions are in MM

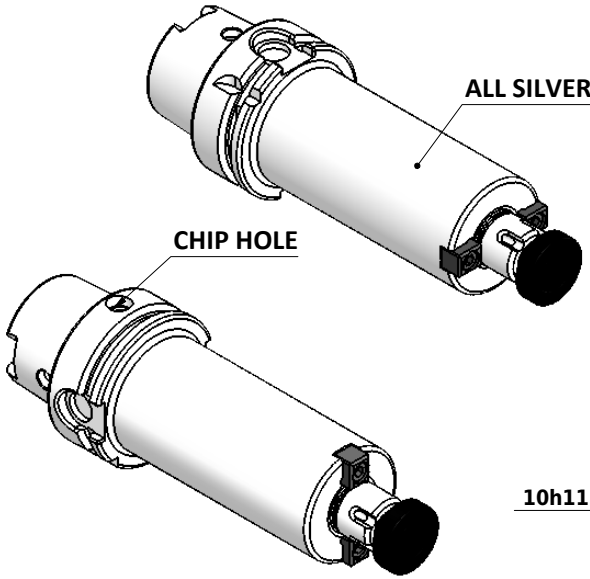

CUSTOMER APPROVAL REQUIRED	
APPROVED BY	
DATE	

FOR QUOTATION PURPOSE ONLY

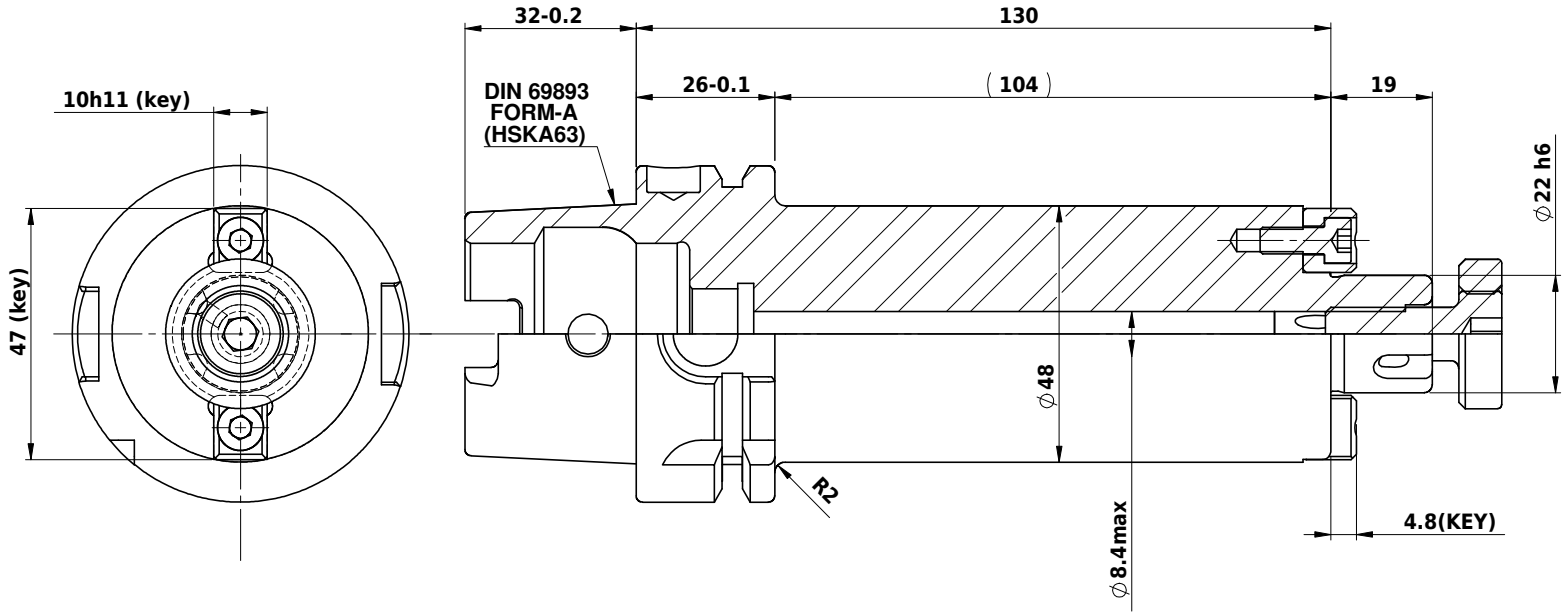

LABEL :

2002380.2205

AUFSTECKFRÄSDORN MIT IKZ

FACE MILL HOLDER COOLANT

DIN69893 HSK63A

AS 22 mm x 130 mm

G2,5 / 25000

MARKING : DIN 69893 A HSK63 D22 H130 IKZ G2.5 25000 U/MIN

BALANCING 2.5G @ 25000 RPM

WEIGHT :2.10 Kg.

ITEM NO.	PART NUMBER	DESCRIPTION	QTY
1	FWA063H-SMX22130	HSKA63SMS22130TCWW	1
2	CCS-M10-22	CUTTER CLAMPING SCREW(B.O)	1
3	KEY 10x12x10 - 22	DRIVING KEY-(B.O)	2
4	M5X12	ALLEN SCREW-(B.O)	2

μ m	0.012	0.025	0.05	0.1	0.2	0.4	0.8	1.6	3.2	6.3	12.5	25	50
GRADES		N1	N2	N3	N4	N5	N6	N7	N8	N9	N10	N11	N12
SYMBOLS													

TOLERANCE		
FREE DIMENSIONS TOLERANCE		
Dimns.	Dia	Length
0.5 to 3	± 0.05	± 0.10
3 to 6	± 0.10	± 0.15
6 to 30	± 0.15	± 0.20
30 to 120	± 0.20	± 0.25
120 to 500	± 0.30	± 0.50

MATERIALS: 16Mncr5

2017	NAME	DATE
DRAWN	PK	18/08
CHECKED	RVL	18/08
APPROVED		
SCALE : NTS	QTY. :	

2002380.2205

PART NAME: HSKA63SMS22130TCWW

DRAWING No. FWA063H-SMX22130

REV. 00