Rev.No.	Ch.Let	Alterations	Date	Sign.	Appd.

All Dimensions are in MM

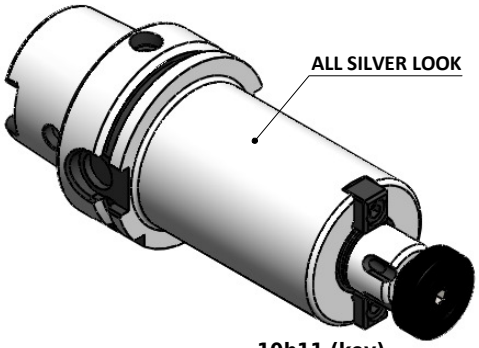

CUSTOMER APPROVAL REQUIRED	
APPROVED BY	
DATE	

FOR QUOTATION PURPOSE ONLY

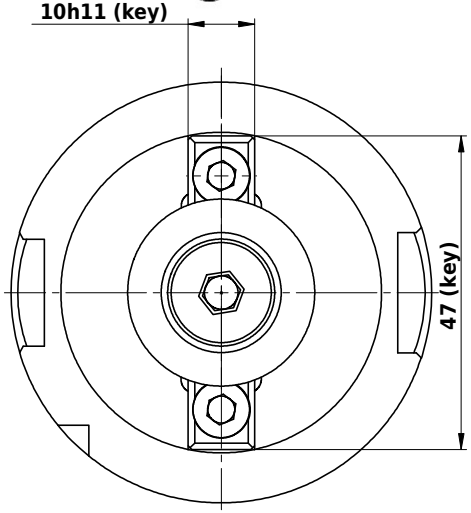

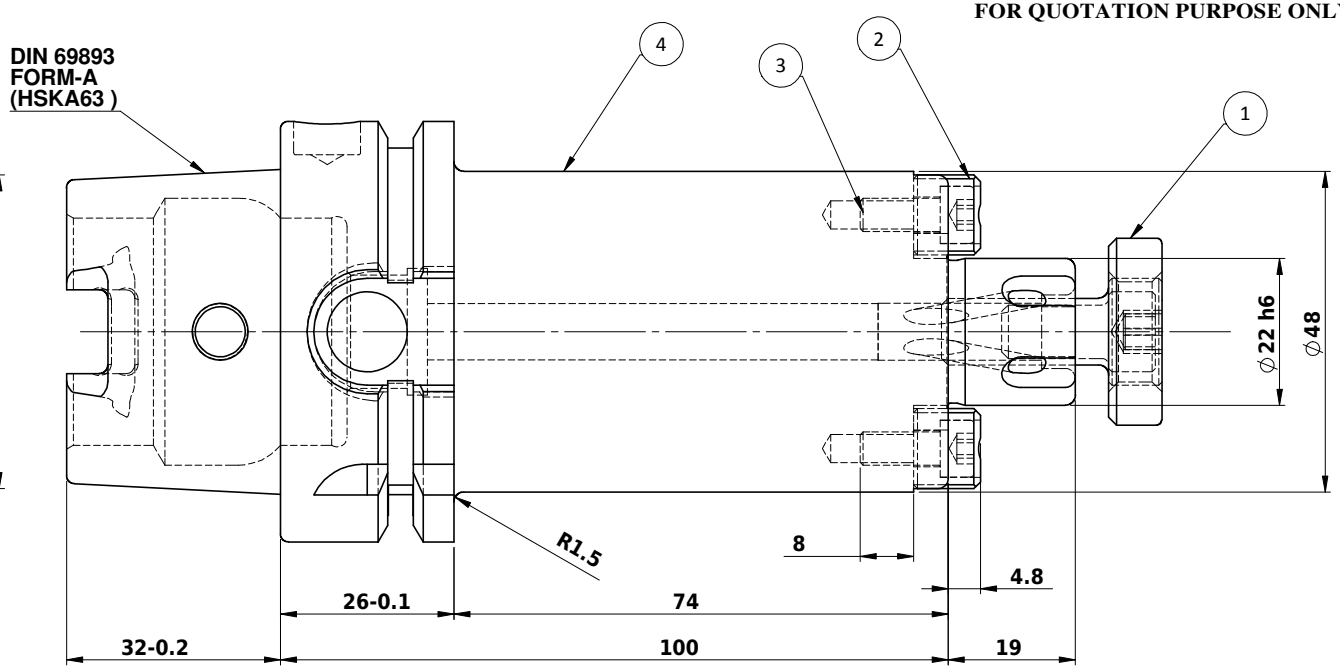

LABEL :

2002380.2201

AUFSTECKFRÄSDORN MIT IKZ

FACE MILL HOLDER COOLANT

DIN69893 HSK63A

AS 22 mm x 100 mm

G2,5 / 25000

MARKING : DIN 69893 A HSK63 D22 H100 IKZ G2.5 25000 U/MIN

WEIGHT :1.7 Kg.

BALANCING 2.5G @ 25000 RPM

ITEM NO.	PART NUMBER	DESCRIPTION	QTY
1	CCS-M10-22	CUTTER CLAMPING SCREW (B.O.)	1
2	KEY 10x12x10 - 22	DRIVING KEY (B.O.)	2
3	AS-M5X12	ALLEN SCREW-(B.O)	2
4	FWA063H-SMX22100	HSKA63SMS22100TCWW	1

μ m	0.012	0.025	0.05	0.1	0.2	0.4	0.8	1.6	3.2	6.3	12.5	25	50
GRADES		N1	N2	N3	N4	N5	N6	N7	N8	N9	N10	N11	N12
SYMBOLS													

TOLERANCE		
FREE DIMENSIONS TOLERANCE		
Dimns.	Dia	Length
0.5 to 3	± 0.05	± 0.10
3 to 6	± 0.10	± 0.15
6 to 30	± 0.15	± 0.20
30 to 120	± 0.20	± 0.25
120 to 500	± 0.30	± 0.50

MATERIALS: 16Mncr5

2014	NAME	DATE
DRAWN	RPA	21/07
CHECKED	RVL	21/07
APPROVED		
SCALE : NTS	QTY. :	

PART NAME: HSKA63SMS22100TCWW

2002380.2201

DRAWING No. FWA063H-SMX22100

REV. 00