Rev.No.	Ch.Let	Alterations	Date	Sign.	Appd.

All Dimensions are in MM

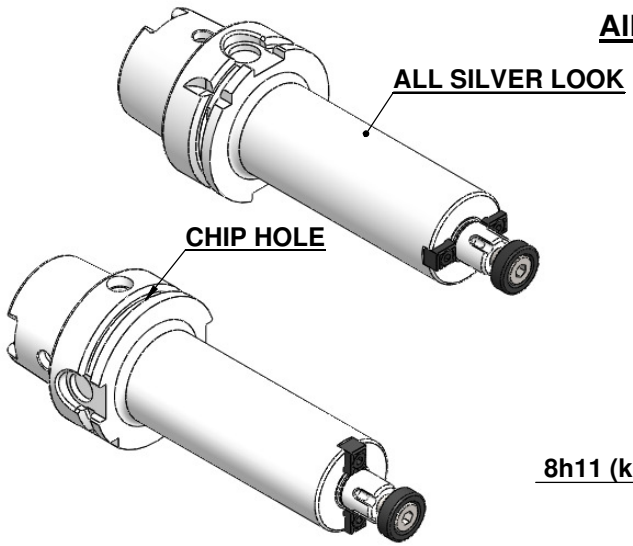

CUSTOMER APPROVAL REQUIRED	
APPROVED BY	
DATE	

FOR QUOTATION PURPOSE ONLY

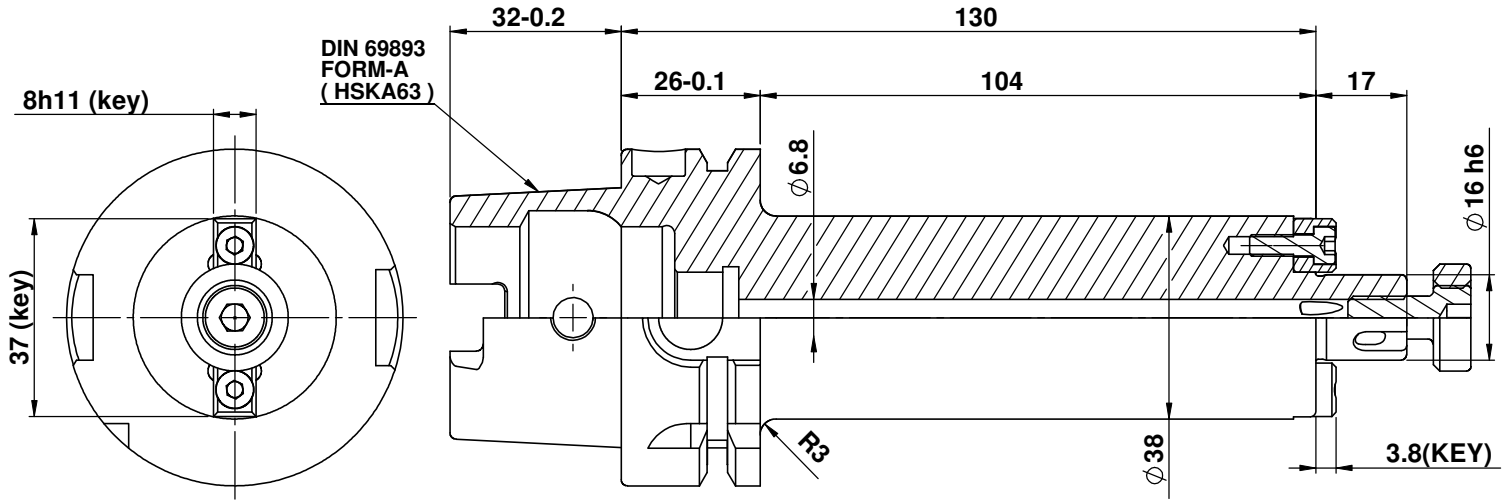

LABEL :

2002380.1605

AUFSTECKFRÄSDORN MIT IKZ

FACE MILL HOLDER COOLANT

DIN69893 HSK63A

AS 16 mm x 130 mm

G2,5 / 25000

MARKING : DIN 69893 A HSK63 D16 H130 IKZ
G2.5 25000 U/MIN

WEIGHT : 1.54 Kg.

BALANCING 2.5G @ 25000 RPM

ITEM NO.	PART NUMBER	DESCRIPTION	QTY.
1	FWA063H-SMX16130	HSKA63SMS16130TCWW	1
2	CCS-M8-16	CUTTER CLAMPING SCREW-(B.O)	1
3	AS-M4x12	ALLEN SCREW(B.O)	2
4	KEY 08x10x8-16	DRIVING KEY-(B.O)	2

μ m	0.012	0.025	0.05	0.1	0.2	0.4	0.8	1.6	3.2	6.3	12.5	25	50
GRADES		N1	N2	N3	N4	N5	N6	N7	N8	N9	N10	N11	N12
SYMBOLS													

TOLERANCE FREE DIMENSIONS TOLERANCE		
Dimns.	Dia	Length
0.5 to 3	± 0.05	± 0.10
3 to 6	± 0.10	± 0.15
6 to 30	± 0.15	± 0.20
30 to 120	± 0.20	± 0.25
120 to 500	± 0.30	± 0.50

MATERIALS: 16MnCr5

2017	NAME	DATE
DRAWN	PK	18/08
CHECKED	RVL	18/08
APPROVED		
SCALE : NTS	QTY. :	

2002380.1605

PART NAME: HSKA63SMS16130TCWW

DRAWING No. FWA063H-SMX16130

REV. 00