Rev.No.	Ch.Let	Alterations	Date	Sign.	Appd.

All Dimensions are in MM

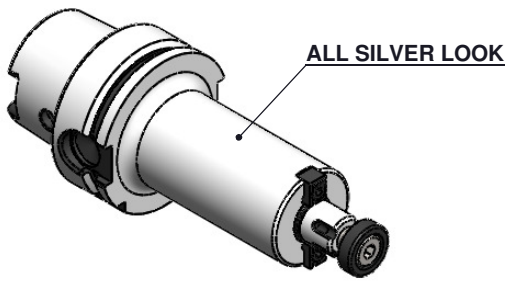

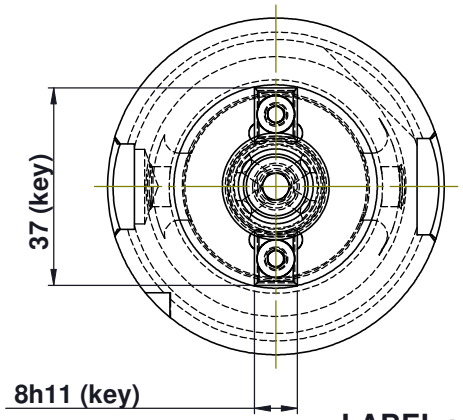

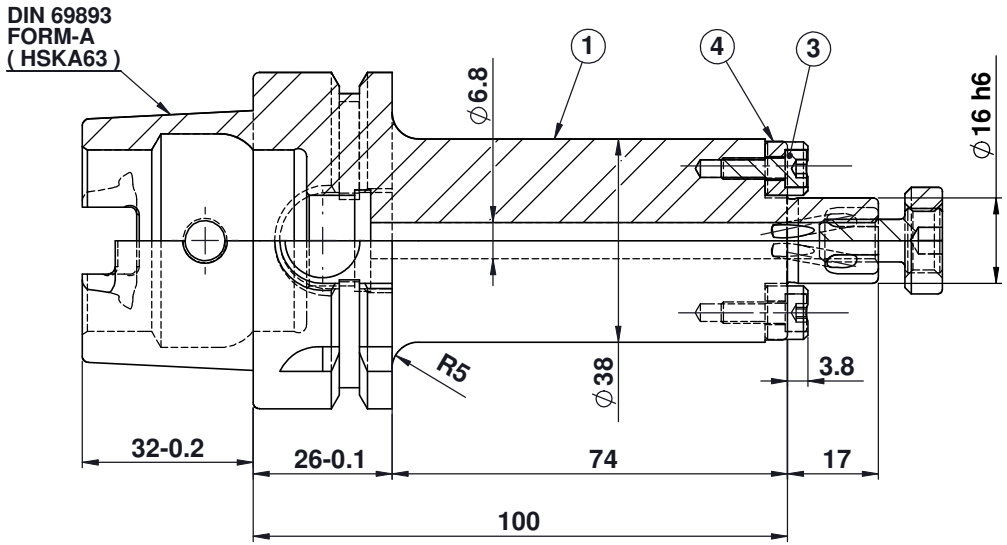

LABEL :

2002380.1601

..

AUFSTECKFRÄSDORN MIT IKZ

FACE MILL HOLDER COOLANT

DIN69893 HSK63A

AS 16 mm x 100 mm

G2,5 / 25000

WEIGHT : 1.3 Kg.

BALANCING 2.5G @ 25000 RPM

MARKING : DIN 69893 A HSK63 D16 H100 IKZ
G2.5 25000 U/MIN

ITEM NO.	DESCRIPTION	PART NUMBER	QTY.
1	HSKA63SMS16100TCWW	FWA063H-SMX16100	1
2	CUTTER CLAMPING SCREW	CCS-M8-16-(B.O)	1
3	ALLEN SCREW(B.O)	AS-M4x12-(B.O)	2
4	DRIVING KEY	KEY 08x10x8-16-(B.O)	2

μ m	0.012	0.025	0.05	0.1	0.2	0.4	0.8	1.6	3.2	6.3	12.5	25	50
GRADES		N1	N2	N3	N4	N5	N6	N7	N8	N9	N10	N11	N12
SYMBOLS													

TOLERANCE
FREE DIMENSIONS TOLERANCE

Dimns.	Dia	Length
0.5 to 3	± 0.05	± 0.10
3 to 6	± 0.10	± 0.15
6 to 30	± 0.15	± 0.20
30 to 120	± 0.20	± 0.25
120 to 500	± 0.30	± 0.50

MATERIALS: 16MnCr5

2014	NAME	DATE
DRAWN	RPA	21/07
CHECKED	RVL	21/07
APPROVED		
SCALE : NTS	QTY. :	

2002380.1601

PART NAME: HSKA63SMS16100TCWW

DRAWING No. FWA063H-SMX16100

REV. 00