Rev.No.	Ch.Let	Alterations	Date	Sign.	Appd.
01		EK HOLES ADDED & ANGLE CHANGED	24.03.23	Raj	RVL

All Dimensions are in MM

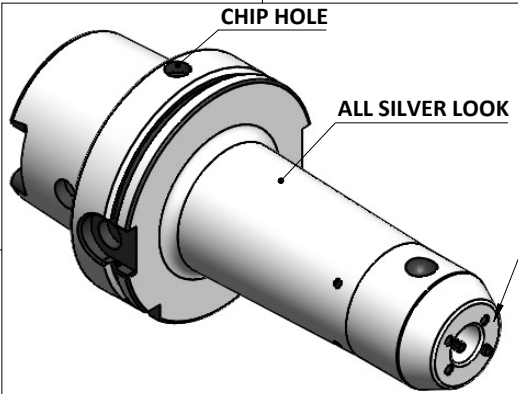

PERMENENT SEALING WITH LOCTITE

SCREWS TO BE PACKED SEPERATELY IN PLASTIC POUCH WITH LABEL & PUT INTO WELDON BORE & THEN SEAL THE HOLDER WITH COVER

LABEL FOR PLASTIC BAGS:
Verschlussschraube
Grub Screw
M4 X 4mm x 2 mm

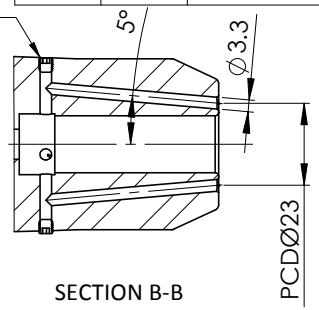

SECTION B-B

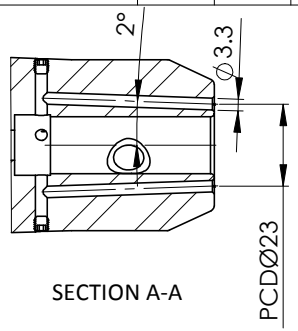

SECTION A-A

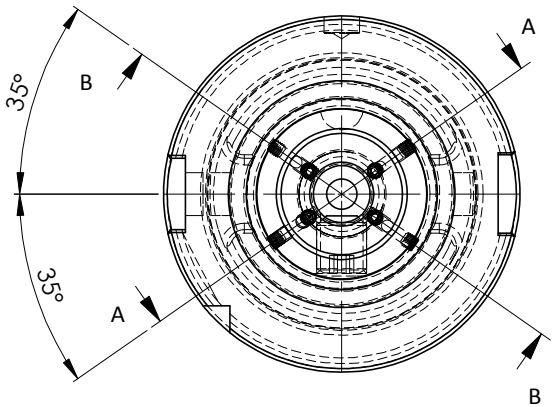

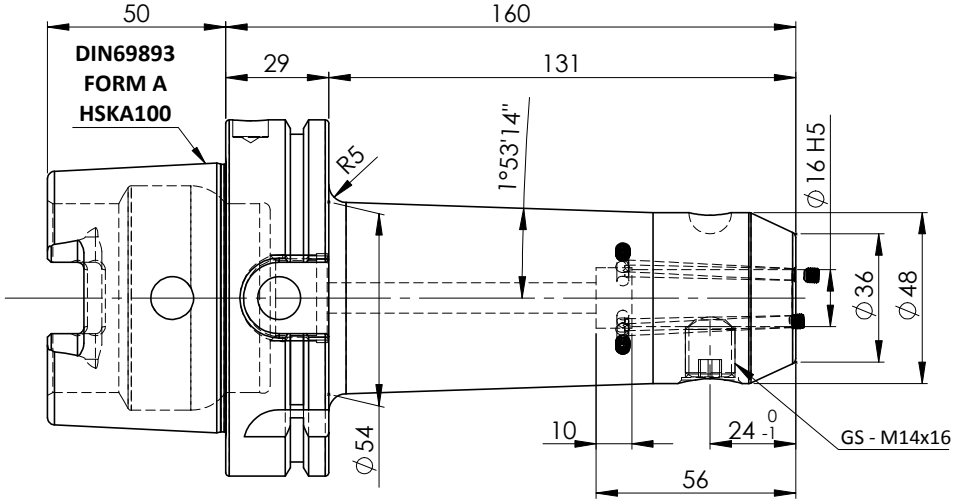

LABEL :

2002379.1602
WELDON-AUFNAHME MIT KK
WELD.HOLDER COOL.CHANNEL
DIN69893 HSK100A
WK 16 mm x 160 mm
G2.5 25000 U/MIN

MARKING : DIN 69893 A HSK100A WK16 H160
G2.5 25000 U/MIN

NOTE :

BALANCING 2.5G AT 25000 RPM

WEIGHT : 3.8 Kg

ITEM NO.	PART NUMBER	DESCRIPTION	QTY.
1	FWA100H-EKH16160	HSKA100EK16160WW	1
2	GS-M14X16-DIN1835-B	GRUB SCREW	1
3	GS-M4X4	GRUB SCREW	8

μm	0.012	0.025	0.05	0.1	0.2	0.4	0.8	1.6	3.2	6.3	12.5	25	50
GRADES	N1	N2	N3	N4		N5	N6	N7	N8	N9	N10	N11	N12
SYMBOLS	▽▽▽▽					▽▽▽		▽▽			▽		~

TOLERANCE		
FREE DIMENSIONS TOLERANCE		
Dimns.	Dia	Length
0.5 to 3	±0.05	±0.10
3 to 6	±0.10	±0.15
6 to 30	±0.15	±0.20
30 to 120	±0.20	±0.25
120 to 500	±0.30	±0.50

MATERIALS: 16Mncr5

2015	NAME	DATE
DRAWN	ELA	18/5
CHECKED	RVL	18/5
APPROVED		

SCALE : NTS QTY. :

2002379.1602

PART NAME: HSKA100EK16160WW

DRAWING No. FWA100H-EKH16160

REV. 01