Rev.No.	Ch.Let	Alterations	Date	Sign.	Appd.

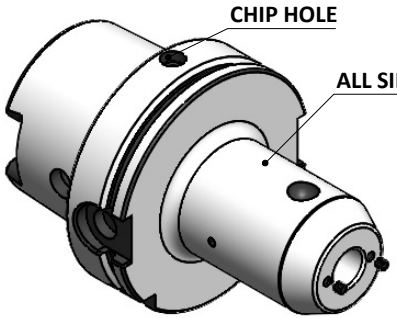

All Dimensions are in MM

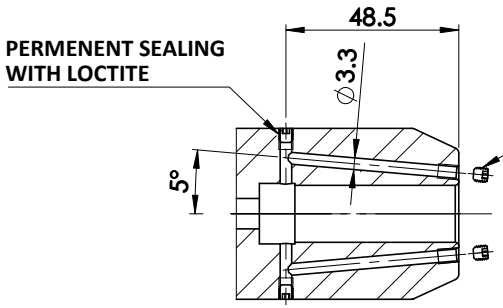

A-A

SCREWS TO BE PACKED SEPERATELY
IN PLASTIC POUCH WITH LABEL & PUT INTO
WELDON BORE & THEN SEAL THE HOLDER WITH COVER

LABEL FOR PLASTIC BAGS:
Verschlussschraube
Grub Screw
M4 X 4mm x 2 mm

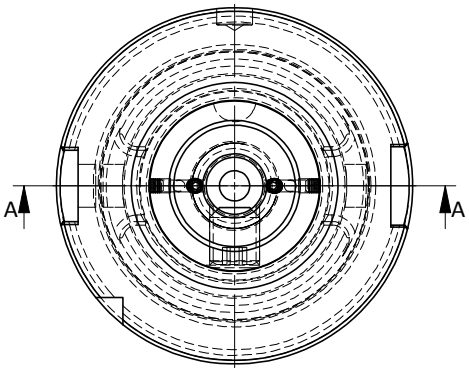

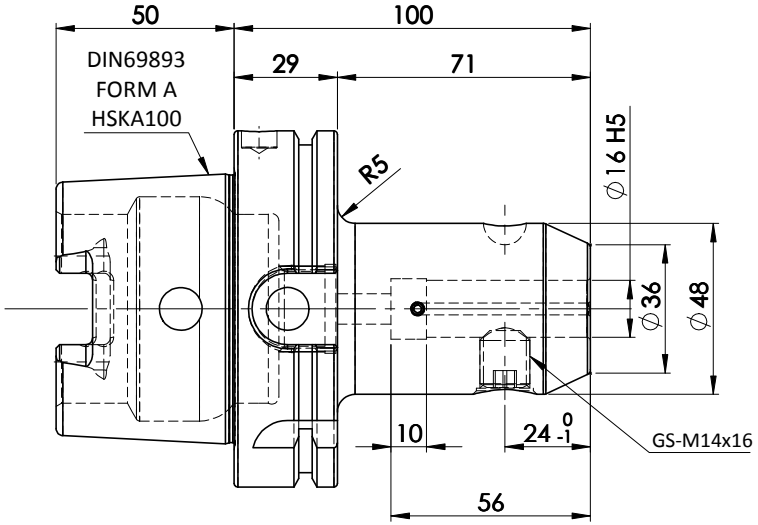

LABEL :

2002379.1600
WELDON-AUFNAHME MIT KK
WELD.HOLDER COOL.CHANNEL
DIN69893 HSK100A
WK 16 mm x 100 mm
G2.5 25000 U/MIN

MARKING : DIN 69893 A HSK100A WK16 H100
G2.5 25000 U/MIN

NOTE :

BALANCING 2.5G AT 25000 RPM

WEIGHT : 2.8 Kg

ITEM NO.	PART NUMBER	DESCRIPTION	QTY
1	FWA100H-EKH16100	HSKA100EK16100WW	1
2	GS-M14X16-DIN1835-B	GRUB SCREW	1
3	GS-M4X4	GRUB SCREW	4

μ m	0.012	0.025	0.05	0.1	0.2	0.4	0.8	1.6	3.2	6.3	12.5	25	50
GRADES	N1		N2	N3	N4	N5	N6	N7	N8	N9	N10	N11	N12
SYMBOLS													

TOLERANCE		
FREE DIMENSIONS TOLERANCE		
Dimns.	Dia	Length
0.5 to 3	± 0.05	± 0.10
3 to 6	± 0.10	± 0.15
6 to 30	± 0.15	± 0.20
30 to 120	± 0.20	± 0.25
120 to 500	± 0.30	± 0.50

MATERIALS:
16Mncr5

2015	NAME	DATE
DRAWN	ELA	18/5
CHECKED	RVL	18/5
APPROVED		
SCALE : NTS	QTY. :	

2002379.1600

PART NAME:
HSKA100EK16100WW

DRAWING No.
FWA100H-EKH16100

REV. 01