Rev.No.	Ch.Let	Alterations	Date	Sign.	Appd.
04		EK HOLES 2 NOS CHANGED INTO 4 NOS	24.02.23	Raj	RVL

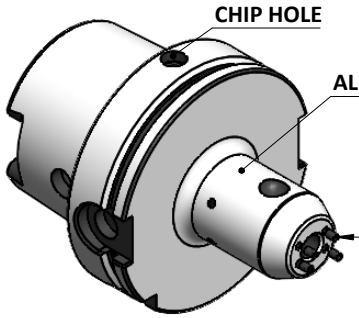

All Dimensions are in MM

PERMENENT SEALING WITH LOCTITE

SCREWS TO BE PACKED SEPERATELY IN PLASTIC POUCH WITH LABEL & PUT INTO WELDON BORE & THEN SEAL THE HOLDER WITH COVER

LABEL FOR PLASTIC BAGS:
Verschlussschraube
Grub Screw
M3 X 5mm x 1.5 mm

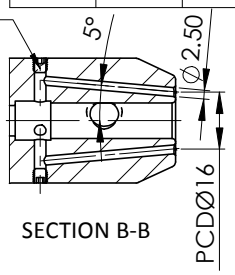

SECTION B-B

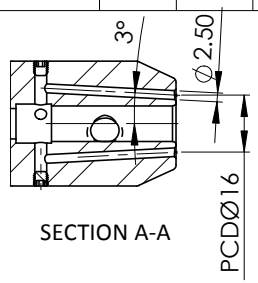

SECTION A-A

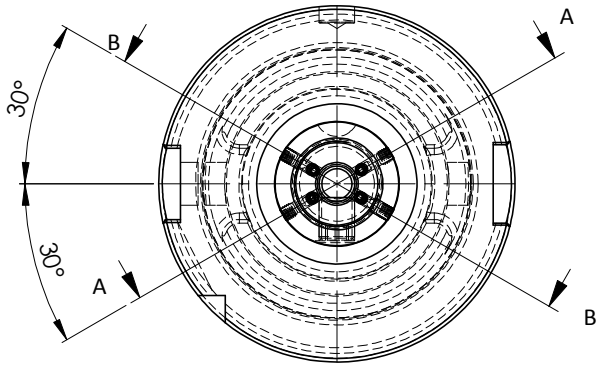

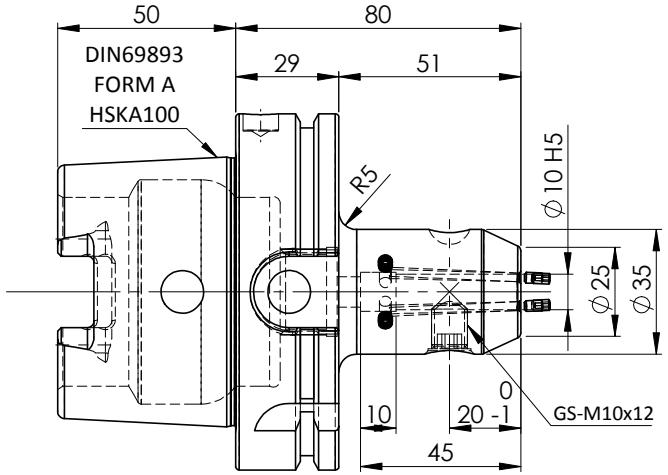

LABEL :

2002379.1000
WELDON-AUFNAHME MIT KK
WELD.HOLDER COOL.CHANNEL
DIN69893 HSK100A
WK 10 mm x 80 mm
G2.5 25000 U/MIN

MARKING : DIN 69893 A HSK100A WK10 H080
G2.5 25000 U/MIN

ITEM NO.	PART NUMBER	DESCRIPTION	QTY
1	FWA100H-EKH10080	HSKA100EK10080WW	1
2	GS- M10x12-DIN1835-B	GRUB SCREW	1
3	GS-M4X4	GRUB SCREW	4
4	GS-M3X5	GRUB SCREW	4

NOTE :

BALANCING 2.5G AT 25000 RPM

WEIGHT : 2.3 Kg

µm	0.012	0.025	0.05	0.1	0.2	0.4	0.8	1.6	3.2	6.3	12.5	25	50
GRADES	N1	N2	N3	N4		N5	N6	N7	N8	N9	N10	N11	N12
SYMBOLS													

TOLERANCE		
FREE DIMENSIONS TOLERANCE		
Dimns.	Dia	Length
0.5 to 3	±0.05	±0.10
3 to 6	±0.10	±0.15
6 to 30	±0.15	±0.20
30 to 120	±0.20	±0.25
120 to 500	±0.30	±0.50

MATERIALS: 16Mncr5

2015	NAME	DATE
DRAWN	ELA	18/5
CHECKED	RVL	18/5
APPROVED		

SCALE : NTS QTY. :

2002379.1000

PART NAME: HSKA100EK10080WW

DRAWING No. FWA100H-EKH10080

REV. 03