Rev.No.	Ch.Let	Alterations	Date	Sign.	Appd.

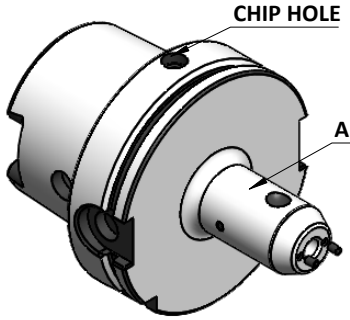

All Dimensions are in MM

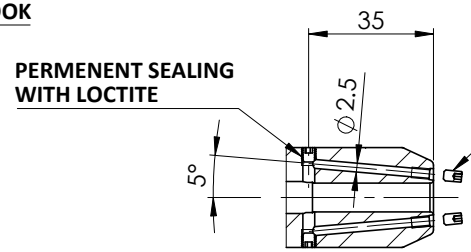

SCREWS TO BE PACKED SEPERATELY
IN PLASTIC POUCH WITH LABEL & PUT INTO
WELDON BORE & THEN SEAL THE HOLDER WITH COVER

LABEL FOR PLASTIC BAGS:
Verschlussschraube
Grub Screw
M3 X 5mm x 1.5 mm

A-A

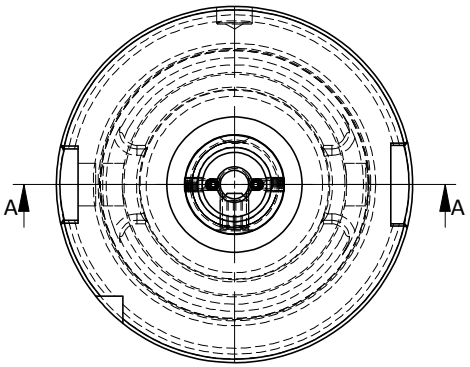

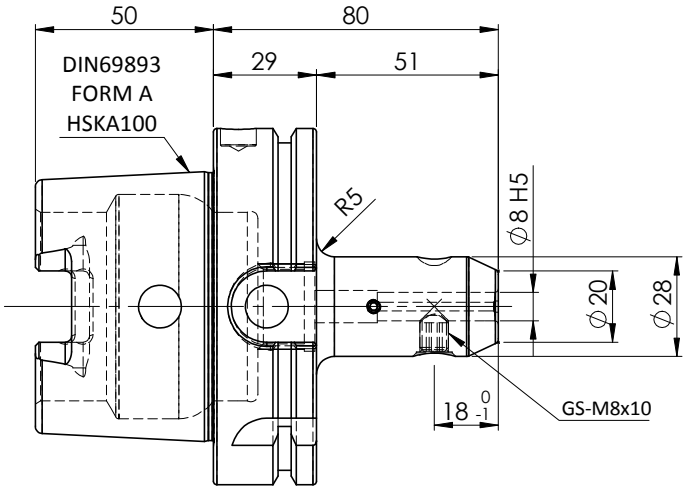

LABEL :

2002379.0800
WELDON-AUFNAHME MIT KK
WELD.HOLDER COOL.CHANNEL
DIN69893 HSK100A
WK 08 mm x 80 mm
G2.5 25000 U/MIN

MARKING : DIN 69893 A HSK100A WK08 H080
G2.5 25000 U/MIN

ITEM NO.	PART NUMBER	DESCRIPTION	QTY
1	FWA100H-EKH08080WW	HSKA100EK08080WW	1
2	GS-M8X10	GRUB SCREW(B.O)	1
3	GS-M4X4	GRUB SCREW	2
4	GS-M3X5	GRUB SCREW	2

NOTE :

BALANCING 2.5G AT 25000 RPM

WEIGHT : 2.2 Kg

		μ m	0.012	0.025	0.05	0.1	0.2	0.4	0.8	1.6	3.2	6.3	12.5	25	50
		GRADES		N1	N2	N3	N4	N5	N6	N7	N8	N9	N10	N11	N12
		SYMBOLS													~

TOLERANCE			MATERIALS:	2015	NAME	DATE	
FREE DIMENSIONS TOLERANCE			16Mncr5	DRAWN	ELA	18/5	2002379.0800
Dimns.	Dia	Length		CHECKED	RVL	18/5	
0.5 to 3	± 0.05	± 0.10		APPROVED			
3 to 6	± 0.10	± 0.15		SCALE : NTS	QTY. :		
6 to 30	± 0.15	± 0.20	PART NAME:			DRAWING No.	REV.
30 to 120	± 0.20	± 0.25	HSKA100EK08080WW			FWA100H-EKH08080	01
120 to 500	± 0.30	± 0.50					