Rev.No.	Ch.Let	Alterations	Date	Sign.	Appd.

All Dimensions are in MM

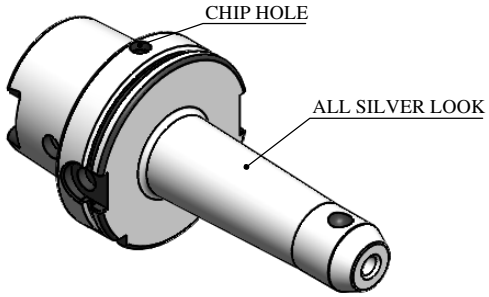

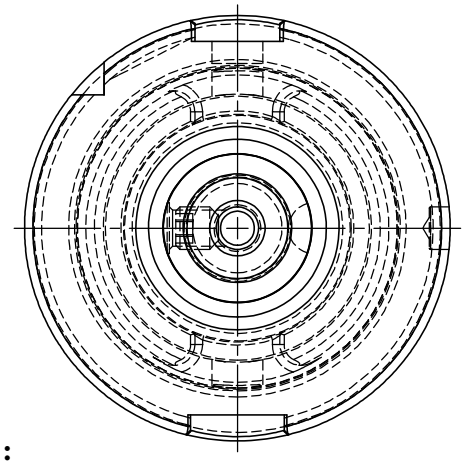

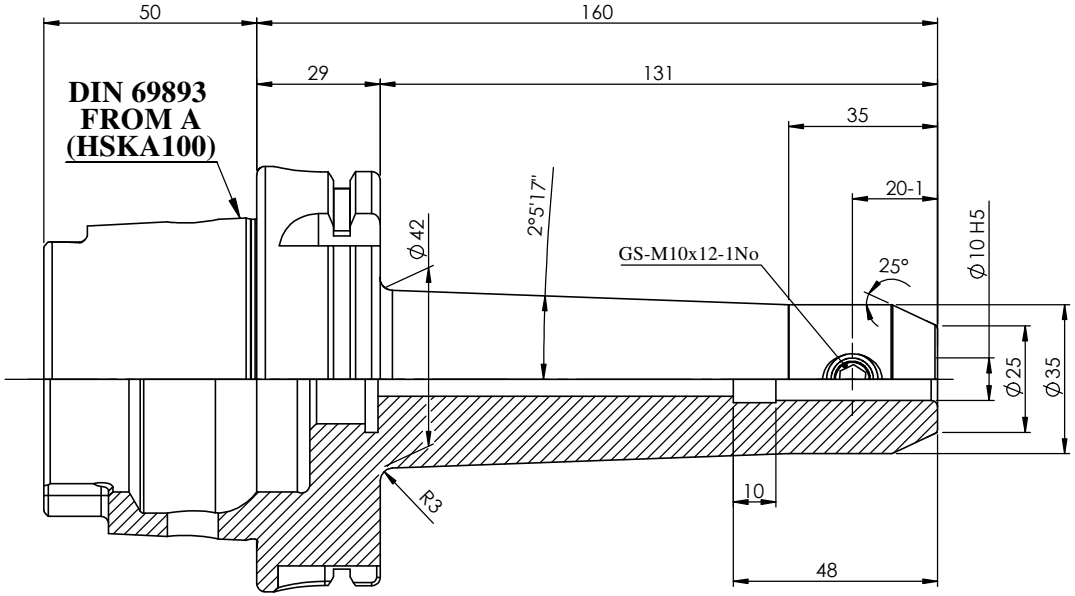

LABEL :

2002378.1002
WELDON-AUFNAHME
WELDON HOLDER
DIN69893 HSK100A
WE 10 mm x 160 mm
G2,5 25.000 U/min

MARKING : DIN 69893 A HSK100A WE10 H160
G2.5 25000 U/MIN

NOTE :

BALANCING 2.5G AT 25000 RPM

WEIGHT : 3.0 kg

ITEM NO.	PART NUMBER	DESCRIPTION	QTY.
1	FWA100H-EMH10160	HSKA100EM10160WW	1
2	GS-M10X12	GRUB SCREW M10X12	1

		µm	0.012	0.025	0.05	0.1	0.2	0.4	0.8	1.6	3.2	6.3	12.5	25	50
		GRADES		N1	N2	N3	N4	N5	N6	N7	N8	N9	N10	N11	N12
		SYMBOLS													

TOLERANCE			MATERIALS:	2015	NAME	DATE	
FREE DIMENSIONS TOLERANCE			16MnCr5	DRAWN	MKP	29/06	2002378.1002
Dimns.	Dia	Length		CHECKED	RVL	29/06	
0.5 to 3	±0.05	±0.10		APPROVED			
3 to 6	±0.10	±0.15		SCALE : NTS	QTY. :		
6 to 30	±0.15	±0.20	PART NAME: HSK100EM10160WW			DRAWING No. FWA100H-EMH10160	REV. 00
30 to 120	±0.20	±0.25					
120 to 500	±0.30	±0.50					