| Rev.No. | Ch.Let | Alterations | Date | Sign. | Appd. |
|---|---|---|---|---|---|
| | | | | | |
| | | | | | |
| | | | | | |

**All Dimensions are in MM**

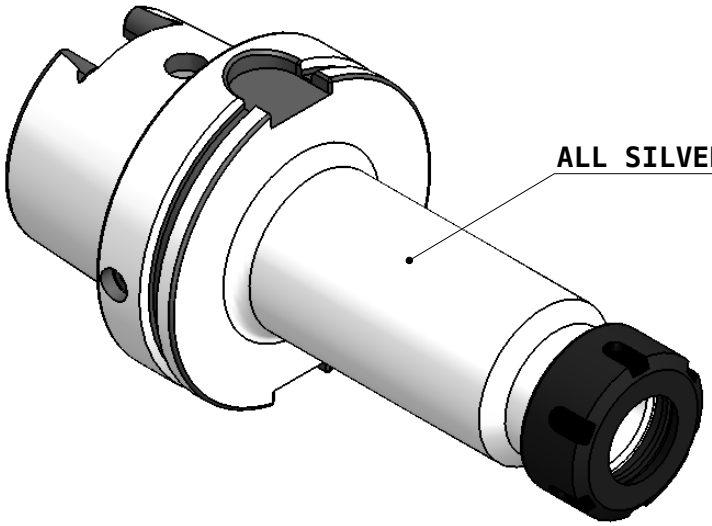


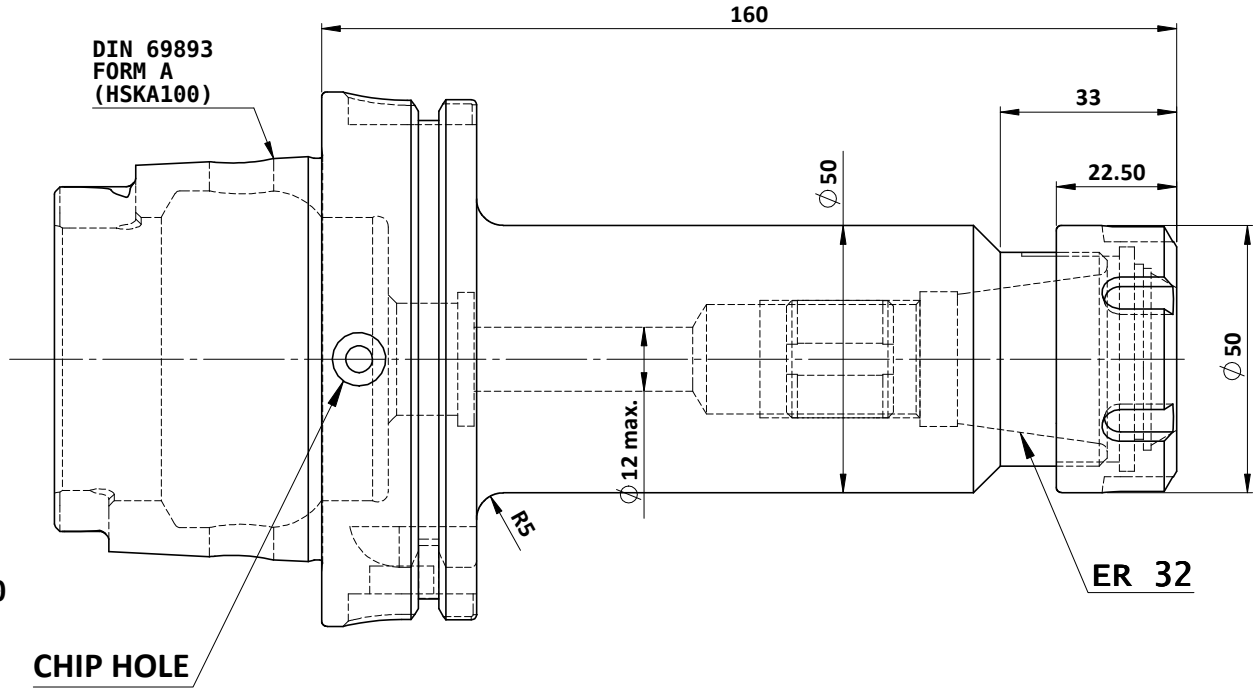


Label :

2002377.0602
SPANNZANGENAUFNAHM
E ER COLLET CHUCK
DIN69893 HSK100A
ER 32 x 160mm
G2,5 / 25.000

MARKING : DIN 69893 A HSK100A CCHER32 H160
G2.5 25000 U/MIN

NOTE :

BALANCING 2.5G AT 25000 RPM

WEIGHT : 3.65 kg

| ITEM NO. | PART NUMBER | DESCRIPTION | QTY. |
|---|---|---|---|
| 1 | HSKA100 CCH ER32 160 WW | COLLET CHUCK HOLDER | 1 |
| 2 | NUTER32 | COLLET NUT | 1 |
| 3 | SCWM22X1.5 | STOPPER SCREW-(B.O)) | 1 |

| μ m | 0.012 | 0.025 | 0.05 | 0.1 | 0.2 | 0.4 | 0.8 | 1.6 | 3.2 | 6.3 | 12.5 | 25 | 50 |
|---|---|---|---|---|---|---|---|---|---|---|---|---|---|
| GRADES | | N1 | N2 | N3 | N4 | N5 | N6 | N7 | N8 | N9 | N10 | N11 | N12 |
| SYMBOLS | | | | | | | | | | | | | |

| TOLERANCE | | |
|---|---|---|
| FREE DIMENSIONS TOLERANCE | | |
| Dimns. | Dia | Length |
| 0.5 to 3 | ± 0.05 | ± 0.10 |
| 3 to 6 | ± 0.10 | ± 0.15 |
| 6 to 30 | ± 0.15 | ± 0.20 |
| 30 to 120 | ± 0.20 | ± 0.25 |
| 120 to 500 | ± 0.30 | ± 0.50 |

MATERIALS:
16MnCr5

| 2015 | NAME | DATE |
|---|---|---|
| DRAWN | MHP | 30/06 |
| CHECKED | RVL | 30/06 |
| APPROVED | | - |
| SCALE : NTS | QTY. : | |

2002377.0602

PART NAME:
COLLET CHUCK HOLDER

DRAWING No.
HSKA100 CCH ER32 160 WW

REV.
00