Rev.No.	Ch.Let	Alterations	Date	Sign.	Appd.

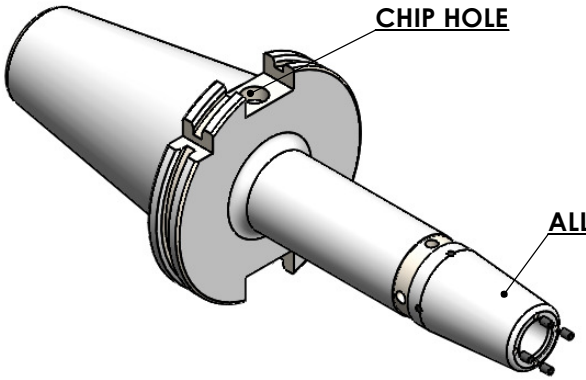

All Dimensions are in MM

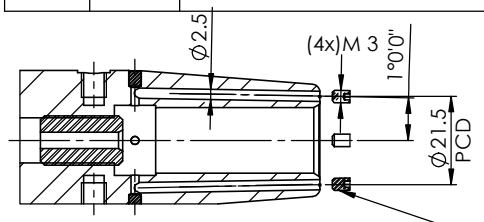

SECTION A-A

For Customer Approval

SCREWS TO BE PACKED SEPERATELY IN PLASTIC POUCH WITH LABEL & PUT INTO BORE & THEN SEAL THE HOLDER WITH COVER

LABEL FOR PLASTIC BAGS:
Verschlussschraube
Grub Screw
M3 X 5mm X1.5mm

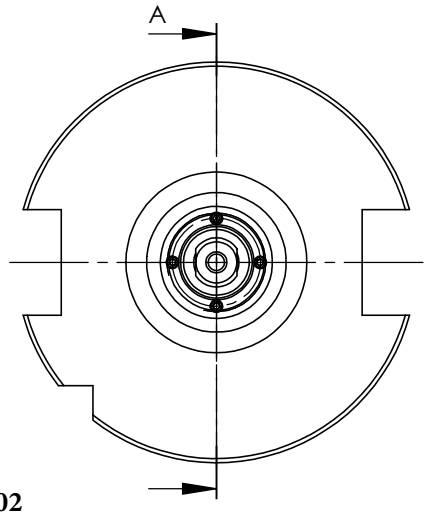

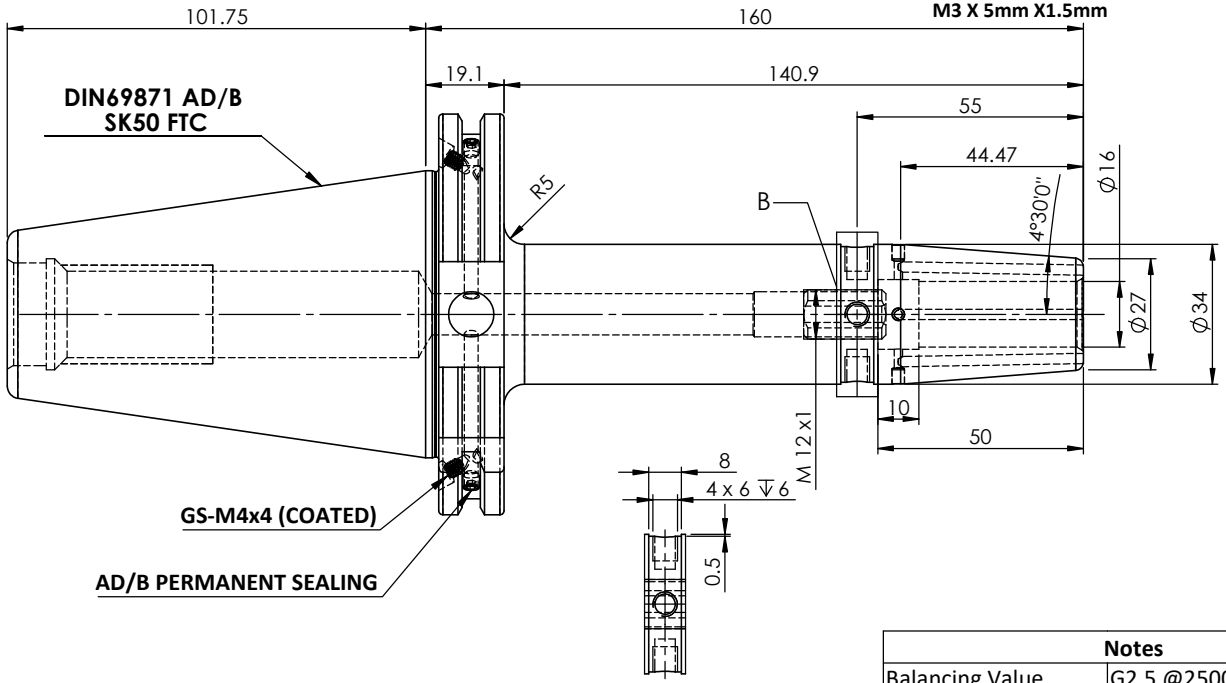

DETAIL B

LABEL :
2002374.1602
SCHRUMPFFUTTER MIT KK
SHRINK FIT HOLDER COOLANT CHANNEL
ISO 7388-1 (DIN69871) SK50 AD/AF (AD+B)
SR4 16mm X 160mm
G2,5/25000 U/MIN

Notes	
Balancing Value	G2.5 @25000RPM
Approx Weight	3.3Kg

MARKING : ISO7388-1 (DIN69871) SK50 AD/AF (AD+B) SFHC16H160
G2,5/25000 U/MIN

ITEM NO.	PART NUMBER	DESCRIPTION	QTY.
6	GS-M3X5	GRUB SCREW	4
5	GS-M4X4 COATED	GRUB SCREW	2
4	GS-M4X4	GRUB SCREW-(B.O)	2
3	EXPANDER PLUG	EXPANDER PLUG-Ø3x3.6mm	4
2	SCWM12X1X20-FLAT	STOPPER SCREW	1
1	F1S509H-SFK16160	SK50SFK16160FWW	1

μ m	0.012	0.025	0.05	0.1	0.2	0.4	0.8	1.6	3.2	6.3	12.5	25	50
GRADES	N1		N2	N3	N4	N5	N6	N7	N8	N9	N10	N11	N12
SYMBOLS	▽▽▽▽					▽▽▽		▽▽			▽		~

TOLERANCE
FREE DIMENSIONS TOLERANCE

Dimns.	Dia	Length
0.5 to 3	± 0.05	± 0.10
3 to 6	± 0.10	± 0.15
6 to 30	± 0.15	± 0.20
30 to 120	± 0.20	± 0.25
120 to 500	± 0.30	± 0.50

MATERIALS:
HDS

2024	NAME	DATE
DRAWN	SVR	26/03
CHECKED	RVL	26/03
APPROVED		
SCALE : NTS	QTY. :	

2002374.1602

PART NAME:
SK50SFK16160FWW

DRAWING No. F1S509H-SFK16160

REV. 00