Rev.No.	Ch.Let	Alterations	Date	Sign.	Appd.

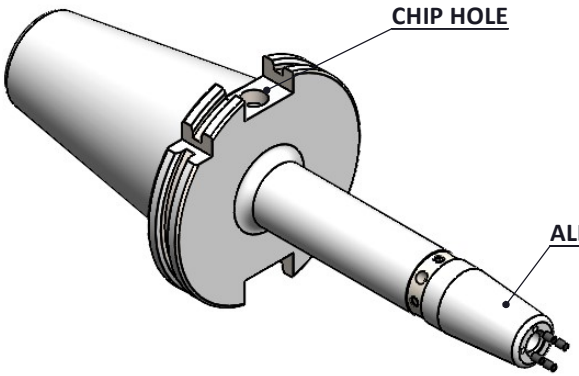

All Dimensions are in MM

For Customer Approval

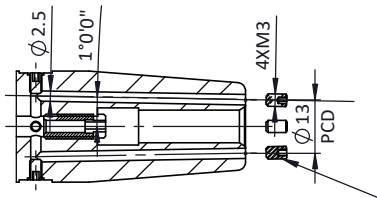

SECTION A-A

SCREWS TO BE PACKED SEPERATELY IN PLASTIC POUCH WITH LABEL & PUT INTO BORE & THEN SEAL THE HOLDER WITH COVER

LABEL FOR PLASTIC BAGS:
Verschlussschraube
Grub Screw
M3 X 5mm X1.5mm

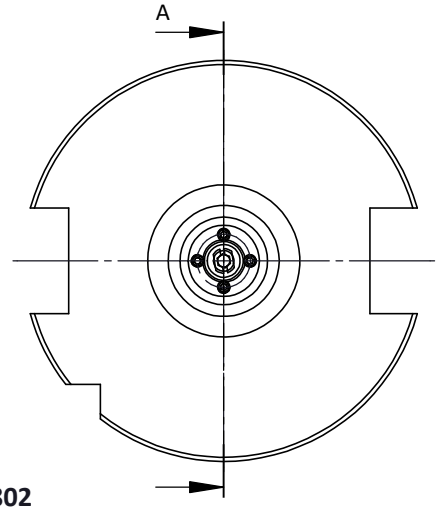

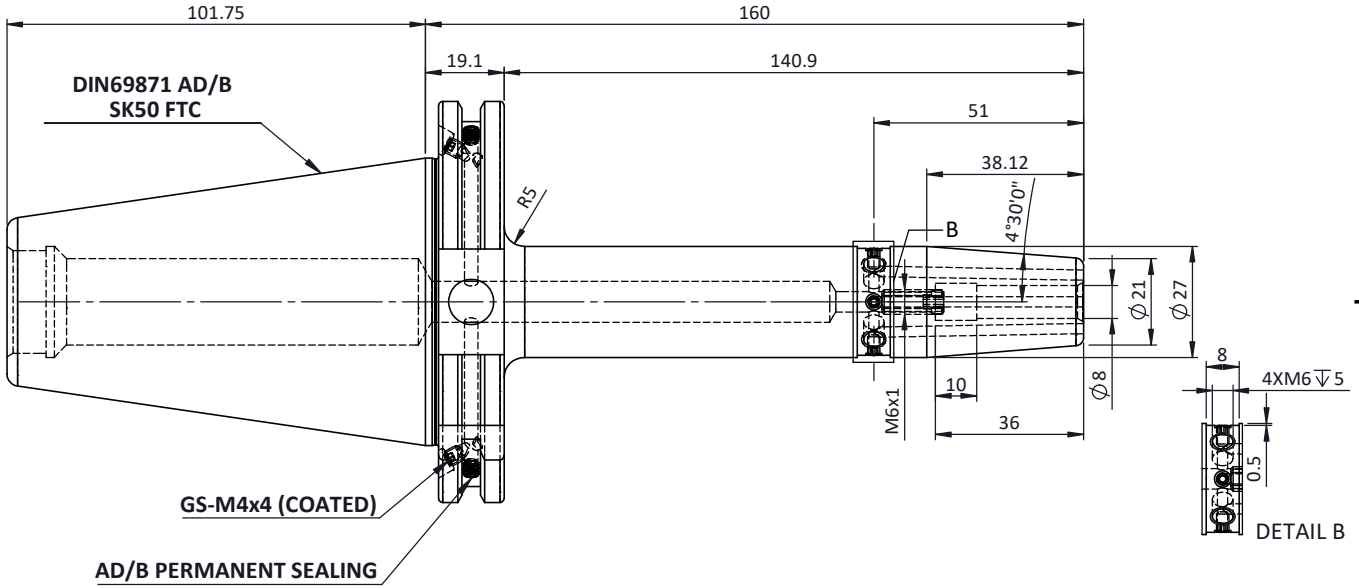

LABEL :
2002374.0802
SCHRUMPFFUTTER MIT KK
SHRINK FIT HOLDER COOLANT CHANNEL
ISO 7388-1 (DIN69871) SK50 AD/AF (AD+B)
SR4 08mm X 160mm
G2,5/25000 U/MIN

Notes	
Balancing Value	G2.5 @25000RPM
Approx Weight	3.0Kg

MARKING : ISO7388-1 (DIN69871) SK50 AD/AF (AD+B) SFHC08H160
G2,5/25000 U/MIN

ITEM NO.	PART NUMBER	DESCRIPTION	QTY.
6	GS-M3X3	GRUB SCREW	4
5	GS-M3X5	GRUB SCREW	4
4	GS-M4X4 COATED	GRUB SCREW	2
3	GS-M4X4	GRUB SCREW-(B.O)	2
2	SCWM6X15-FS	STOPPER SCREW M6	1
1	F1S509H-SFK08160	SK50SFK08160FWW	1

μm	0.012	0.025	0.05	0.1	0.2	0.4	0.8	1.6	3.2	6.3	12.5	25	50
GRADES		N1	N2	N3	N4	N5	N6	N7	N8	N9	N10	N11	N12
SYMBOLS													

TOLERANCE		
FREE DIMENSIONS TOLERANCE		
Dimns.	Dia	Length
0.5 to 3	±0.05	±0.10
3 to 6	±0.10	±0.15
6 to 30	±0.15	±0.20
30 to 120	±0.20	±0.25
120 to 500	±0.30	±0.50

MATERIALS: HDS

2024	NAME	DATE
DRAWN	KATHIR	31/08
CHECKED	RVL	31/08
APPROVED		
SCALE : NTS	QTY. :	

2002374.0802

PART NAME: **SK50SFK08160FWW**

DRAWING No. F1S509H-SFK08160

REV. 00