Rev.No.	Ch.Let	Alterations	Date	Sign.	Appd.

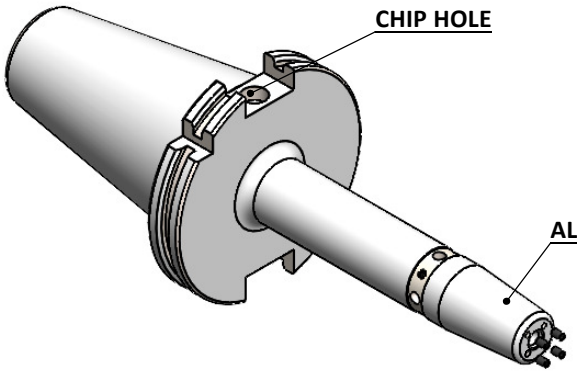

All Dimensions are in MM

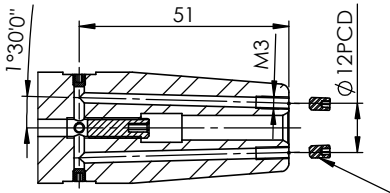

SECTION A-A

SCREWS TO BE PACKED SEPERATELY IN PLASTIC POUCH WITH LABEL & PUT INTO WELDON BORE & THEN SEAL THE HOLDER WITH COVER

LABEL FOR PLASTIC BAGS:
Verschlussschraube
Grub Screw
M3 X 5mm X1.5mm

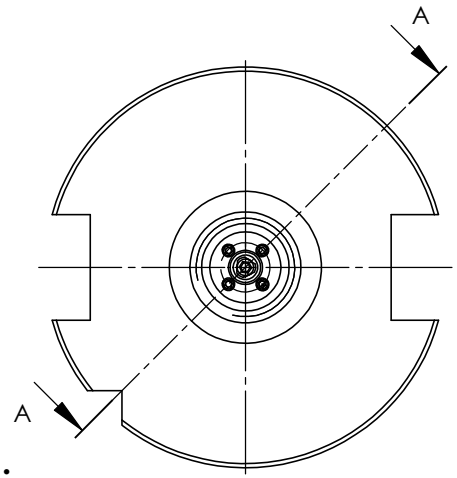

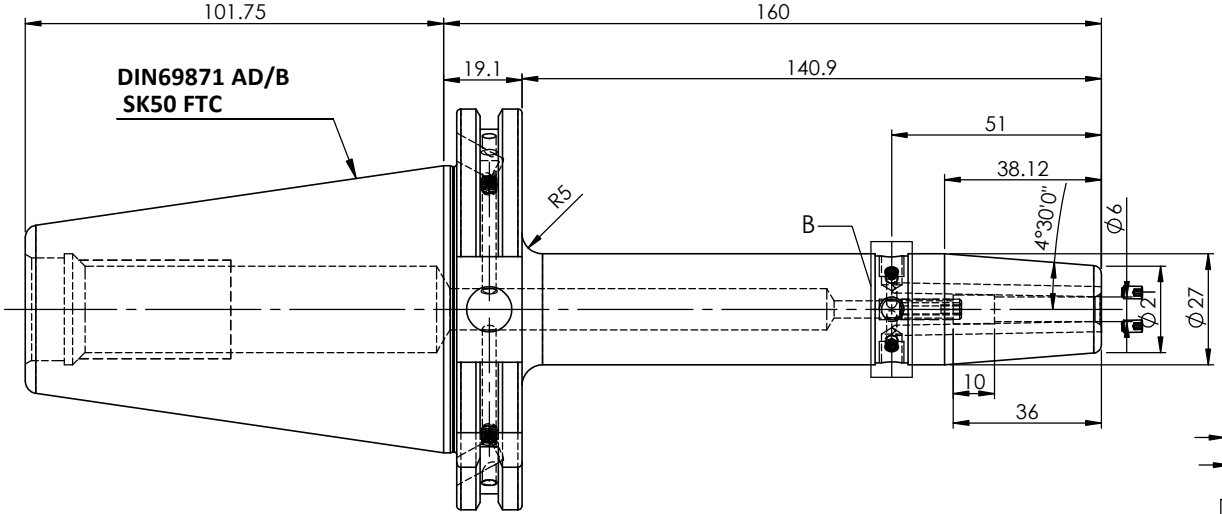

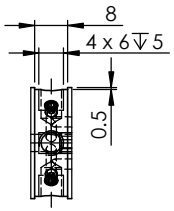

DETAIL B

LABEL :
2002374.0602
SCHRUMPFFUTTER MIT KK
SHRINK FIT HOLDER COOLANT CHANNEL
ISO 7388-1(DIN69871)SK50 AD/AF (AD+B)
SR5 06mm X 160mm
G2,5/25000 U/MIN

MARKING : ISO7388-1(DIN69871)SK50AD/AF(AD+B) SFHC06H160
G2,5/25000 U/MIN

NOTE :

BALANCING 2.5G@ 25000 RPM

Weight : 3.0 Kg

ITEM NO.	PART NUMBER	DESCRIPTION	QTY.
5	GS-M3X5	GRUB SCREW	4
4	GS-M3X3	GRUB SCREW	4
3	GS-M4X4-COATING	GRUB SCREW	2
2	SCWM5X15-3 flat	STOPPER SCREW (B.O.)	1
1	F1S509H-SFK06160	SK50SFK06160FWW	1

μ m	0.012	0.025	0.05	0.1	0.2	0.4	0.8	1.6	3.2	6.3	12.5	25	50
GRADES		N1	N2	N3	N4	N5	N6	N7	N8	N9	N10	N11	N12
SYMBOLS		▽▽▽▽				▽▽▽		▽▽			▽		~

TOLERANCE
FREE DIMENSIONS TOLERANCE

Dimns.	Dia	Length
0.5 to 3	± 0.05	± 0.10
3 to 6	± 0.10	± 0.15
6 to 30	± 0.15	± 0.20
30 to 120	± 0.20	± 0.25
120 to 500	± 0.30	± 0.50

MATERIALS: HDS

2023	NAME	DATE
DRAWN	SVR	16/12
CHECKED	RVL	16/12
APPROVED		
SCALE : NTS	QTY. :	

2002374.0602

PART NAME: **SK50SFK06160FWW**

DRAWING No. F1S509H-SFK06160

REV. 00