Rev.No.	Ch.Let	Alterations	Date	Sign.	Appd.

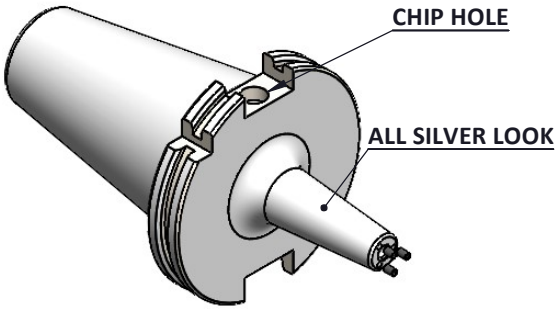

All Dimensions are in MM

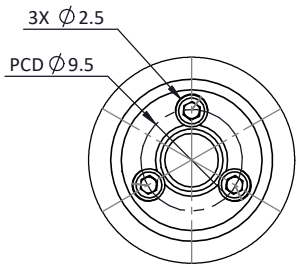

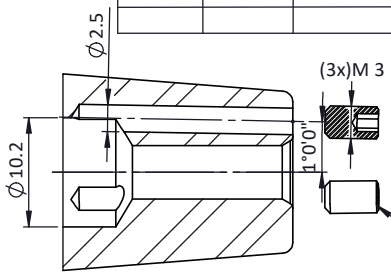

SECTION A-A

For Customer Approval

SCREWS TO BE PACKED SEPERATELY IN PLASTIC POUCH WITH LABEL & PUT INTO BORE & THEN SEAL THE HOLDER WITH COVER

LABEL FOR PLASTIC BAGS:
Verschlussschraube
Grub Screw
M3 X 5mm X1.5mm

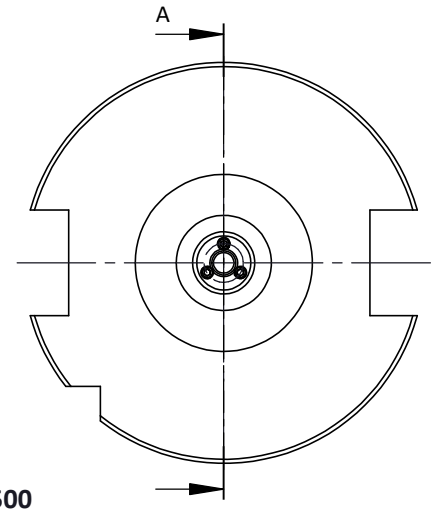

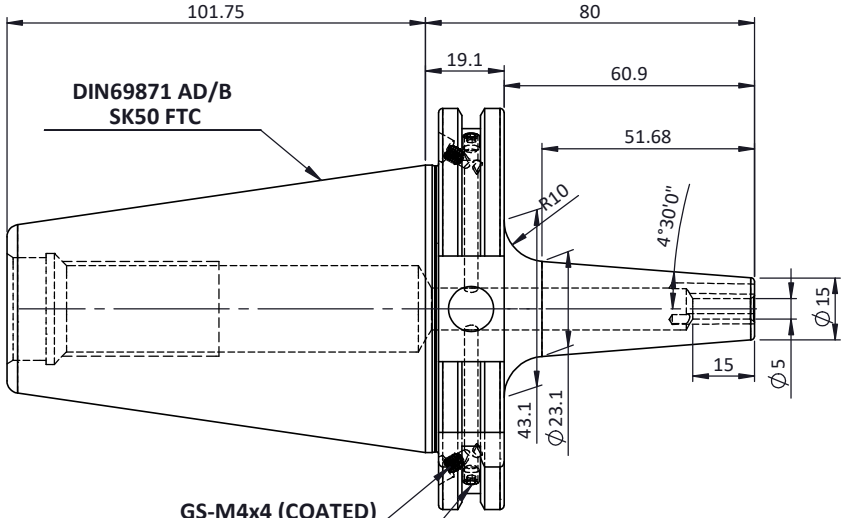

GS-M4x4 (COATED)

AD/B PERMANENT SEALING

LABEL :
2002374.0500
SCHRUMPFFUTTER MIT KK
SHRINK FIT HOLDER COOLANT CHANNEL
ISO 7388-1 (DIN69871) SK50 AD/AF (AD+B)
SR4 05mm X 080mm
G2,5/25000 U/MIN

MARKING : ISO7388-1 (DIN69871) SK50 AD/AF (AD+B) SFHC05H080
G2,5/25000 U/MIN

NOTE : WITHOUT BALANCING SCREW HOLES

Notes	
Balancing Value	G2.5 @25000RPM
Approx Weight	2.6Kg

		μm	0.012	0.025	0.05	0.1	0.2	0.4	0.8	1.6	3.2	6.3	12.5	25	50
		GRADES		N1	N2	N3	N4	N5	N6	N7	N8	N9	N10	N11	N12
		SYMBOLS													

TOLERANCE			MATERIALS:	2022	NAME	DATE	
FREE DIMENSIONS TOLERANCE			HDS	DRAWN	SVR	29/01	**2002374.0500**
Dimns.	Dia	Length		CHECKED	RVL	29/01	
0.5 to 3	±0.05	±0.10		APPROVED			
3 to 6	±0.10	±0.15		SCALE : NTS	QTY. :		
6 to 30	±0.15	±0.20	PART NAME:			DRAWING No.	REV.
30 to 120	±0.20	±0.25	**SK50SFK05080FWW**			F1S509H-SFK05080	00
120 to 500	±0.30	±0.50					

ITEM NO.	PART NUMBER	DESCRIPTION	QTY.
4	GS-M3X5	GRUB SCREW	3
3	GS-M4X4 COATED	GRUB SCREW	2
2	GS-M4X4	GRUB SCREW-(B.O)	2
1	F1S509H-SFK05080	SK50SFK05080FWW	1