Rev.No	Ch.Let	Alterations	Date	Sign.	Appd.

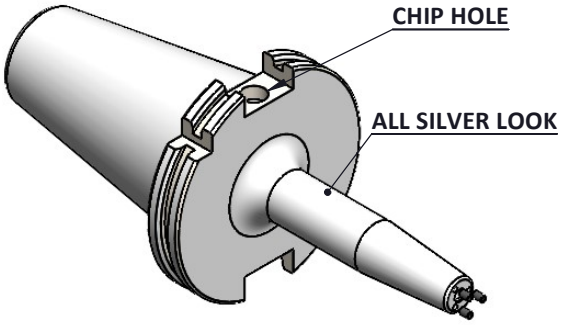

All Dimensions are in MM

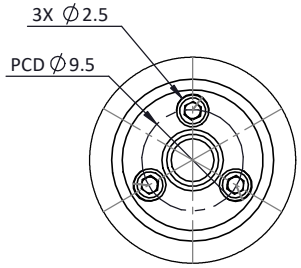

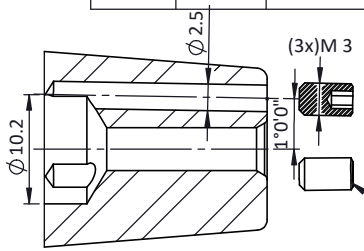

SECTION A-A

For Customer Approval

SCREWS TO BE PACKED SEPERATELY IN PLASTIC POUCH WITH LABEL & PUT INTO BORE & THEN SEAL THE HOLDER WITH COVER

LABEL FOR PLASTIC BAGS:
Verschlussschraube
Grub Screw
M3 X 5mm X1.5mm

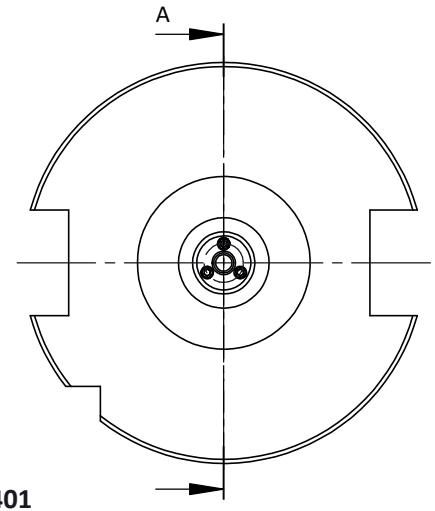

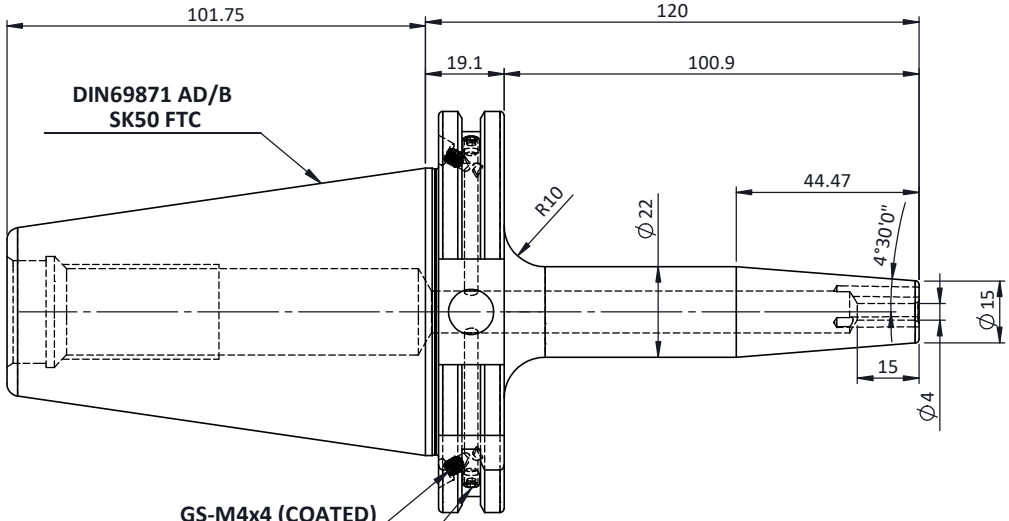

GS-M4x4 (COATED)

AD/B PERMANENT SEALING

LABEL :
2002374.0401
SCHRUMPFFUTTER MIT KK
SHRINK FIT HOLDER COOLANT CHANNEL
ISO 7388-1 (DIN69871) SK50 AD/AF (AD+B)
SR4 04mm X 120mm
G2,5/25000 U/MIN

MARKING : ISO7388-1 (DIN69871) SK50 AD/AF (AD+B) SFHC04H120
G2,5/25000 U/MIN

NOTE : WITHOUT BALANCING SCREW HOLES

4	GS-M3X5	GRUB SCREW	3
3	GS-M4X4 COATED	GRUB SCREW	2
2	GS-M4X4	GRUB SCREW-(B.O)	2
1	F1S509H-SFK04120	SK50SFK04120FWW	1
ITEM NO.	PART NUMBER	DESCRIPTION	QTY.

Notes	
Balancing Value	G2.5 @25000RPM
Approx Weight	2.6Kg

μm	0.012	0.025	0.05	0.1	0.2	0.4	0.8	1.6	3.2	6.3	12.5	25	50
GRADES		N1	N2	N3	N4	N5	N6	N7	N8	N9	N10	N11	N12
SYMBOLS													

TOLERANCE
FREE DIMENSIONS TOLERANCE

Dimns.	Dia	Length
0.5 to 3	±0.05	±0.10
3 to 6	±0.10	±0.15
6 to 30	±0.15	±0.20
30 to 120	±0.20	±0.25
120 to 500	±0.30	±0.50

MATERIALS: HDS

2022	NAME	DATE
DRAWN	SVR	29/01
CHECKED	RVL	29/01
APPROVED		
SCALE : NTS	QTY. :	

2002374.0401

PART NAME: **SK50SFK04120FWW**

DRAWING No. F1S509H-SFK04120

REV. 00