Rev.No.	Ch.Let	Alterations	Date	Sign.	Appd.

All Dimensions are in MM

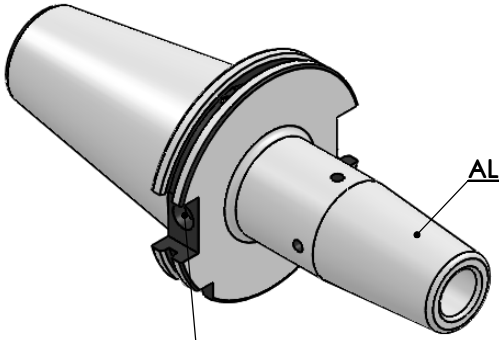

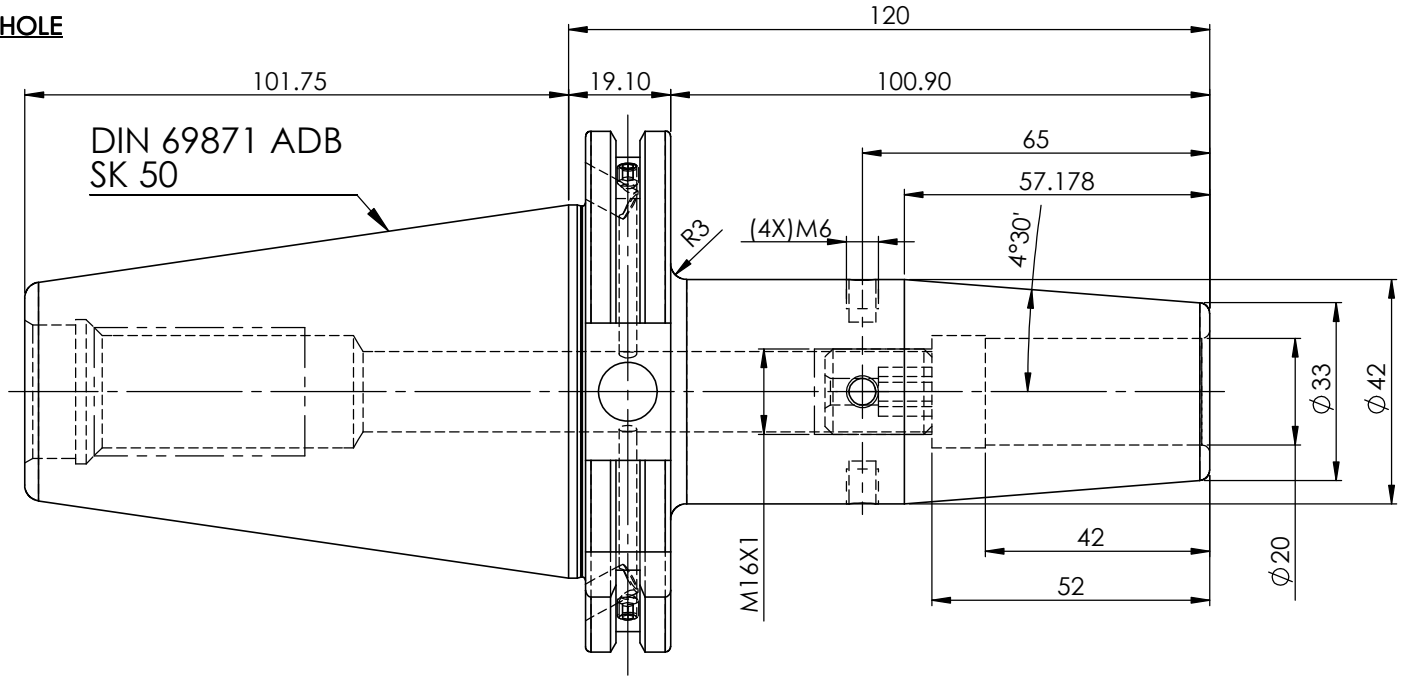

Labeling:

2002373.2001
SCHRUMPFFUTTER
SHRINK FIT HOLDER
DIN 69871 SK50 AD+B
SR 20mm X 120 mm
G2,5 25,000 U/MIN

Marking:

DIN69871AD&B SK50 SFH20120 G2,5 25000

Weight : 3.4 kg

BALANCING 2.5G@ 25000 RPM

ITEM NO.	PART NUMBER	DESCRIPTION	QTY.
1	FWS509H-SFC20120	SK50SFC20120FWW	1
2	SCWM16X1P	STOPPER SCREW (B.O.)	1
3	GS-M4 x 4	GRUB SCREW(B.O.)	2

μ m	0.012	0.025	0.05	0.1	0.2	0.4	0.8	1.6	3.2	6.3	12.5	25	50
GRADES	N1		N2	N3	N4	N5	N6	N7	N8	N9	N10	N11	N12
SYMBOLS													

TOLERANCE		
FREE DIMENSIONS TOLERANCE		
Dimns.	Dia	Length
0.5 to 3	± 0.05	± 0.10
3 to 6	± 0.10	± 0.15
6 to 30	± 0.15	± 0.20
30 to 120	± 0.20	± 0.25
120 to 500	± 0.30	± 0.50

MATERIALS: HDS

2020	NAME	DATE
DRAWN	PGK	21/10
CHECKED	RVL	21/10
APPROVED		
SCALE : 1:1	QTY. :	

2002373.2001

PART NAME: **SK50SFC20120FWW**

DRAWING No. FWS509H-SFC20120

REV. 00