Rev.No.	Ch.Let	Alterations	Date	Sign.	Appd.

All Dimensions are in MM

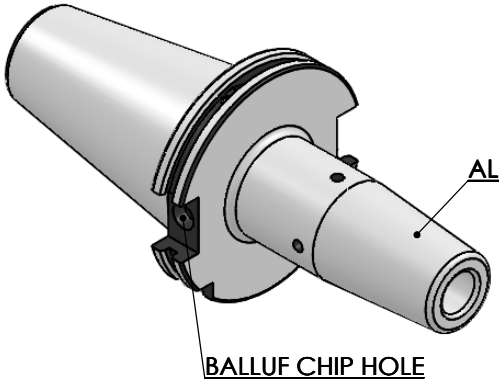

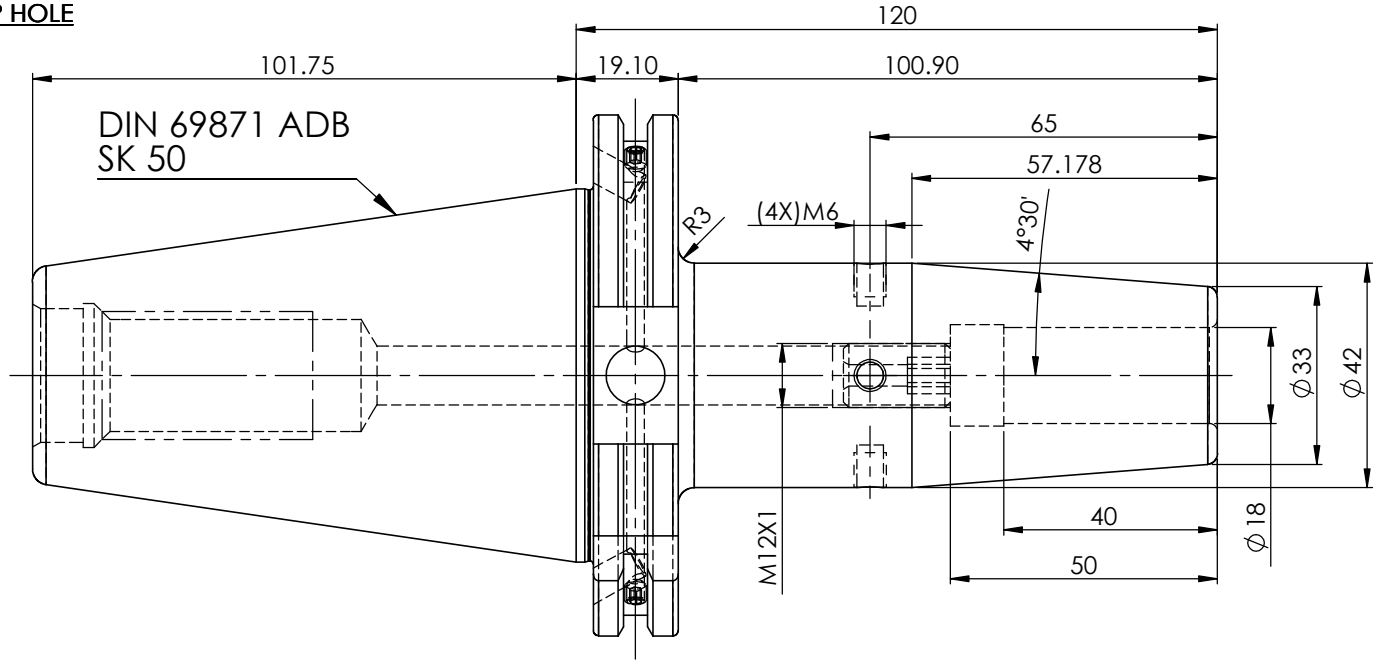

Labeling:

2002373.1801
SCHRUMPFFUTTER
SHRINK FIT HOLDER
DIN 69871 SK50 AD+B
SR 18mm X 120 mm
G2,5 25,000 U/MIN

Marking:

DIN69871AD&B SK50 SFH18120 G2,5 25000

ITEM NO.	PART NUMBER	DESCRIPTION	QTY.
1	FWS509H-SFC18120	SK50SFC18120FWW	1
2	FTSCWM12	STOPPER SCREW	1
3	GS- M4 x 4	GRUB SCREW(B.O.)	2

Weight : 3.4 kg

BALANCING 2.5G@ 25000 RPM

		μ m	0.012	0.025	0.05	0.1	0.2	0.4	0.8	1.6	3.2	6.3	12.5	25	50
		GRADES		N1	N2	N3	N4	N5	N6	N7	N8	N9	N10	N11	N12
		SYMBOLS													

TOLERANCE			MATERIALS:	2020	NAME	DATE	
FREE DIMENSIONS TOLERANCE			HDS	DRAWN	PGK	21/10	2002373.1801
Dimns.	Dia	Length		CHECKED	RVL	21/10	
0.5 to 3	± 0.05	± 0.10		APPROVED			
3 to 6	± 0.10	± 0.15		SCALE : 1:1	QTY. :		
6 to 30	± 0.15	± 0.20	PART NAME:			DRAWING No.	REV.
30 to 120	± 0.20	± 0.25	SK50SFC18120FWW			FWS509H-SFC18120	00
120 to 500	± 0.30	± 0.50					