| Rev.No | Ch.Let | Alterations | Date | Sign. | Appd. |
|---|---|---|---|---|---|
| | | | | | |
| | | | | | |
| | | | | | |

All Dimensions are in MM

**For Customer Approval**

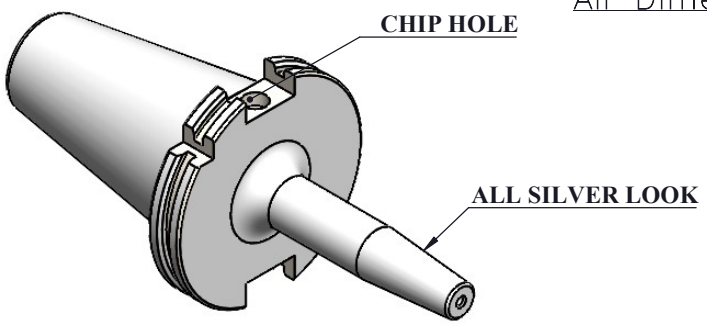


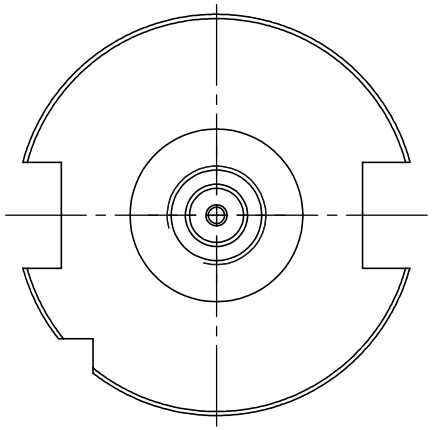

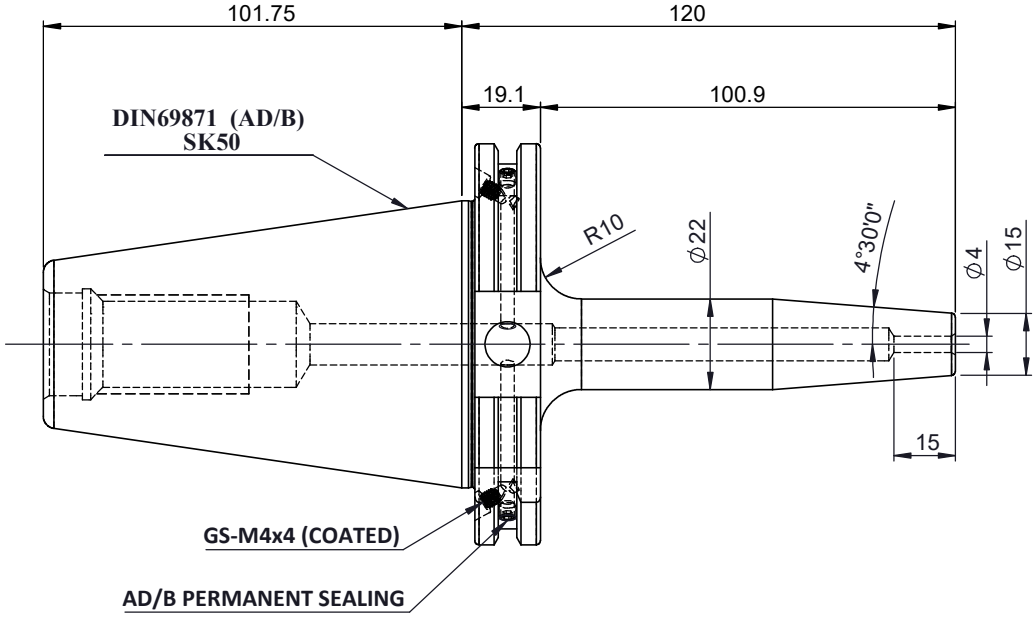


**LABEL :**

**2002373.0401**
**SCHRUMPFFUTTER**
**SHRINK FIT HOLDER**
**ISO 7388-1 (DIN69871) SK50 AD/AF (AD+B)**
**SR2 04mm X 120mm**
**G2,5/25000 U/MIN**

**MARKING : ISO 7388-1 (DIN69871) SK50 AD/AF (AD+B) SR04 H120**
**G2,5/25000 U/MIN**

**NOTE: WITHOUT BALANCING SCREW HOLES**

| ITEM NO. | PART NUMBER | DESCRIPTION | QTY. |
|---|---|---|---|
| 3 | GS-M4X4 COATED | GRUB SCREW | 2 |
| 2 | GS-M4X4 | GRUB SCREW-(B.O) | 2 |
| 1 | F1S509H-SFC04120 | SK40SFC04120FSF | 1 |

| Notes | |
|---|---|
| Balancing Value | G2.5 @25000RPM |
| Approx Weight | 2.8Kg |

| μm | 0.012 | 0.025 | 0.05 | 0.1 | 0.2 | 0.4 | 0.8 | 1.6 | 3.2 | 6.3 | 12.5 | 25 | 50 |
|---|---|---|---|---|---|---|---|---|---|---|---|---|---|
| GRADES | | N1 | N2 | N3 | N4 | N5 | N6 | N7 | N8 | N9 | N10 | N11 | N12 |
| SYMBOLS | | | | | | | | | | | | | |

| TOLERANCE | | |
|---|---|---|
| FREE DIMENSIONS TOLERANCE | | |
| Dimns. | Dia | Length |
| 0.5 to 3 | ±0.05 | ±0.10 |
| 3 to 6 | ±0.10 | ±0.15 |
| 6 to 30 | ±0.15 | ±0.20 |
| 30 to 120 | ±0.20 | ±0.25 |
| 120 to 500 | ±0.30 | ±0.50 |

MATERIALS: HDS

| 2024 | NAME | DATE |
|---|---|---|
| DRAWN | SVR | 26/03 |
| CHECKED | RVL | 26/03 |
| APPROVED | | |
| SCALE : NTS | QTY. : | |

**2002373.0401**

PART NAME: SK50SFC04120F

DRAWING No. F1S509H-SFC04120

REV. 00