Rev.No.	Ch.Let	Alterations	Date	Sign.	Appd.

All Dimensions are in MM

For Customer Approval

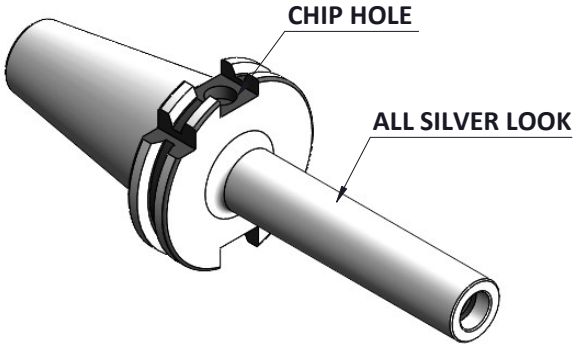

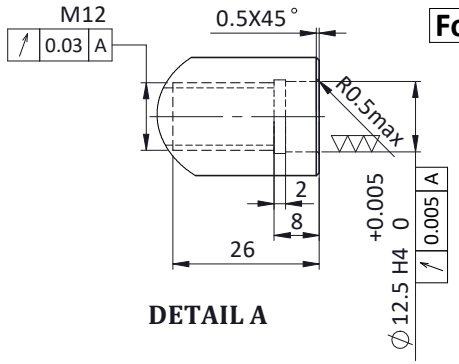

DETAIL A

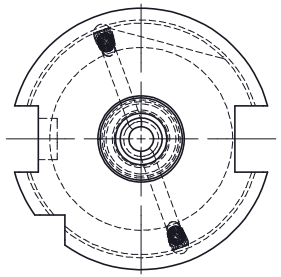

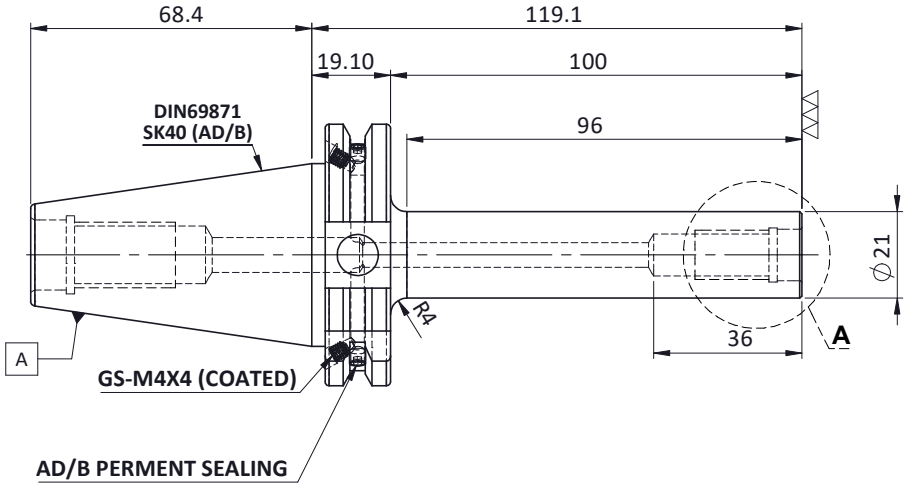

LABEL:-

2002371.1201
EINSCHRAUBFRÄSERAUFNAHME
SCREW-ON HOLDER ZYL/CYL
ISO 7388-1 (DIN69871) SK40 AD/AF (AD+B)
ESS M12 x 100 mm x 119 mm
G2,5 / 25000 U/MIN

MARKING:- ISO 7388-1 (DIN 69871) SK40 AD/AF M12 x 100 mm
G2,5 25000 U/MIN

ITEM NO.	PART NUMBER	DESCRIPTION	QTY.
3	GS-M4X4 COATED	GRUB SCREW	2
2	GS-M4X4	GRUB SCREW-(B.O)	2
1	FWS409H-TMS12119	SK40TMS12119FWW	1

Notes	
Balancing Value	G2.5 @ 25000RPM
Approx Weight	0.86 Kg

µm	0.012	0.025	0.05	0.1	0.2	0.4	0.8	1.6	3.2	6.3	12.5	25	50
GRADES		N1	N2	N3	N4	N5	N6	N7	N8	N9	N10	N11	N12
SYMBOLS													

TOLERANCE		
FREE DIMENSIONS TOLERANCE		
Dimns.	Dia	Length
0.5 to 3	±0.05	±0.10
3 to 6	±0.10	±0.15
6 to 30	±0.15	±0.20
30 to 120	±0.20	±0.25
120 to 500	±0.30	±0.50

MATERIALS: 16MnCr5

2015	NAME	DATE
DRAWN	SVK	19/07
CHECKED	RVL	19/07
APPROVED		
SCALE : NTS	QTY. :	

2002371.1201

PART NAME: SK40TMS12119FWW

DRAWING No. FWS409H-TMS12119

REV. 01