Rev.No.	Ch.Let	Alterations	Date	Sign.	Appd.

All Dimensions are in MM

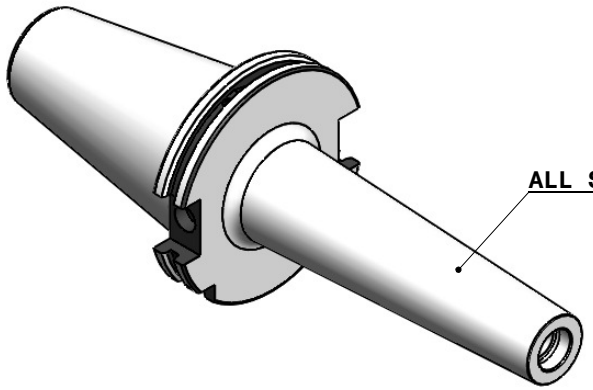

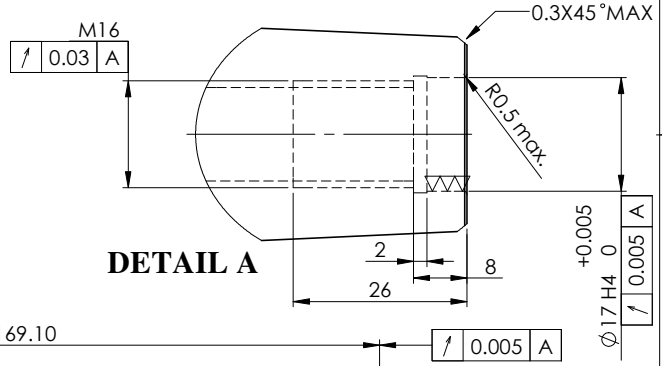

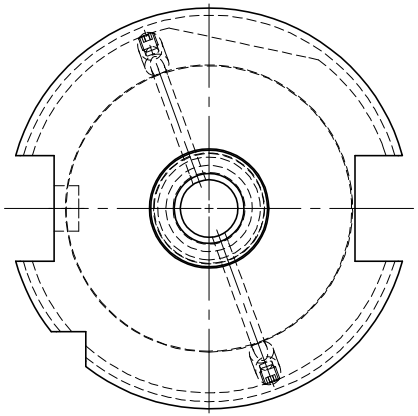

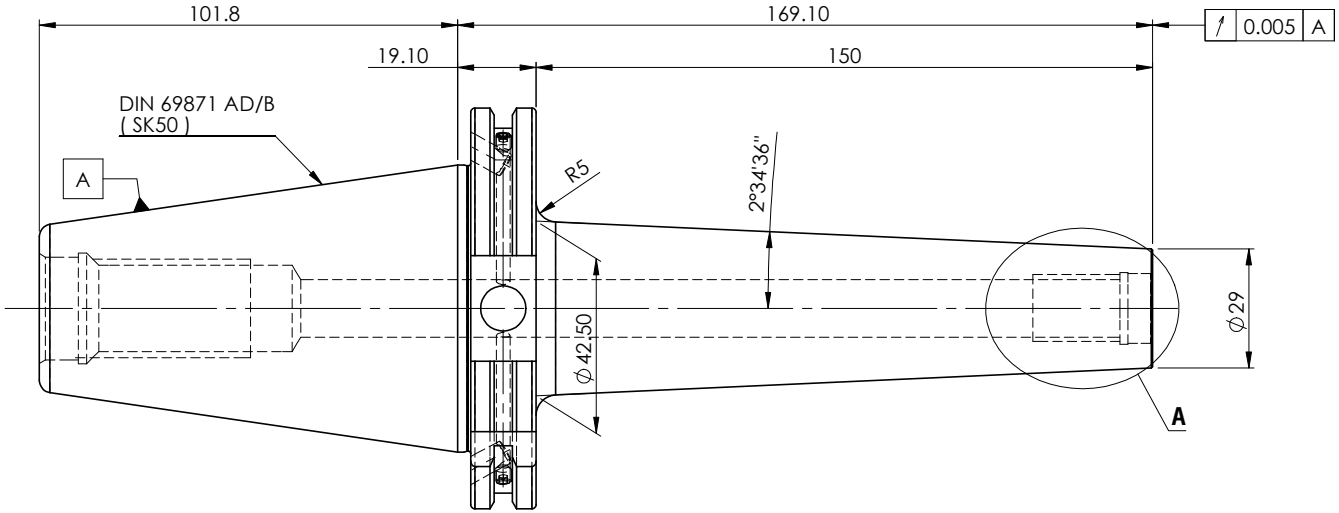

LABEL:-

2002370.1602

EINSCHRAUBFRÄSERAUFNAHME SCREW-ON HOLDER
DIN69871 AD&B SK50
ESS M16 x 150 mm x 169 mm
G2,5 / 25000

MARKING:- DIN 69871 AD&B SK50 M16 x 150

G2,5 25000

NOTE :

BALANCING 2.5 G @ 25000 RPM

WEIGHT: 3.5 Kg

ITEM NO.	PART NUMBER	DESCRIPTION	QTY.
1	FWS509H-TMH16169	SK50TMH16169FWW	1
2	GS-M4X4	GRUB SCREW-(B.O.)	2

μ m	0.012	0.025	0.05	0.1	0.2	0.4	0.8	1.6	3.2	6.3	12.5	25	50
GRADES	N1		N2	N3	N4	N5	N6	N7	N8	N9	N10	N11	N12
SYMBOLS													

TOLERANCE		
FREE DIMENSIONS TOLERANCE		
Dimns.	Dia	Length
0.5 to 3	± 0.05	± 0.10
3 to 6	± 0.10	± 0.15
6 to 30	± 0.15	± 0.20
30 to 120	± 0.20	± 0.25
120 to 500	± 0.30	± 0.50

MATERIALS: 16MnCr5

2020	NAME	DATE
DRAWN	HPK	05/11
CHECKED	RVL	05/11
APPROVED		
SCALE : NTS	QTY. :	

2002370.1602

PART NAME: SK50TMH16169FWW

DRAWING No. FWS509H-TMH16169

REV. 00