Rev.No.	Ch.Let	Alterations	Date	Sign.	Appd.
01	A	ANGLE CHANGED FROM 4°01'15" TO 2°01'16"	25.08.20	KBM	RVL

All Dimensions are in MM

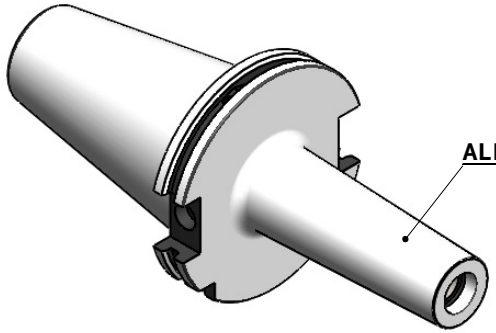

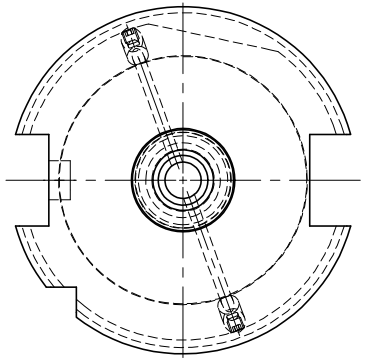

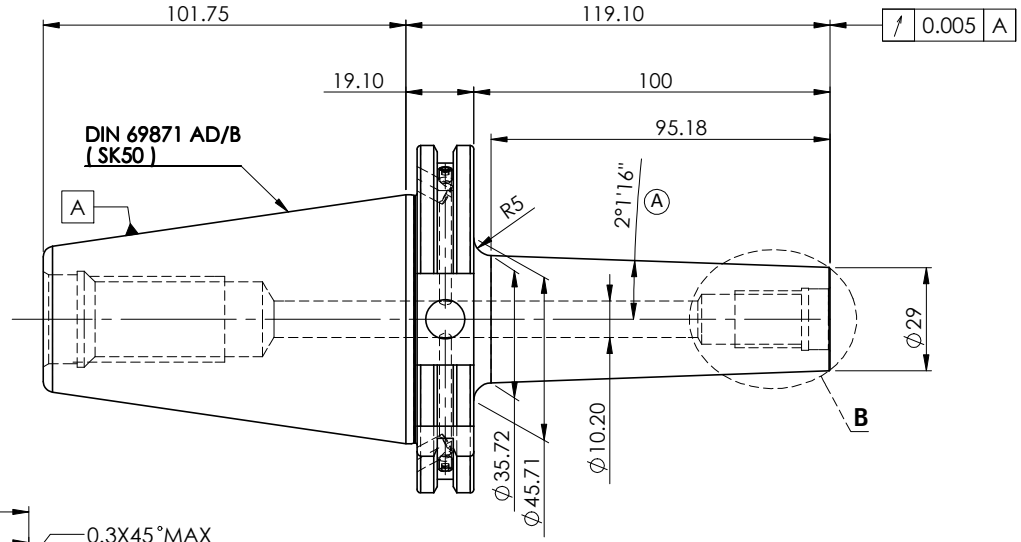

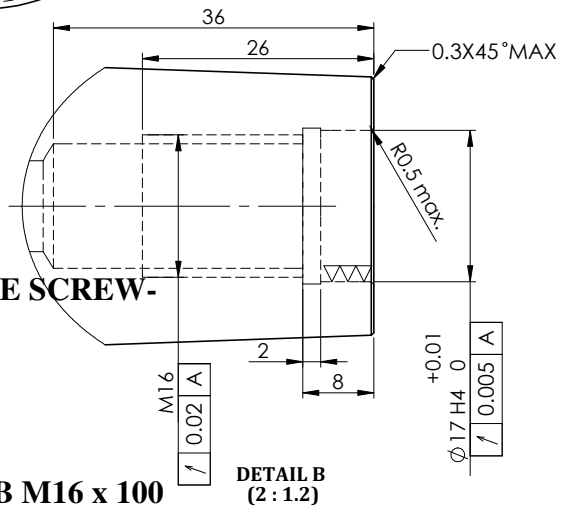

LABEL:-

2002370.1601
EINSCHRAUBFRÄSERAUFNAHME SCREW-ON HOLDER
DIN69871 AD&B SK50
ESS M16 x 100 mm x 119 mm
G2,5 / 25000

MARKING:- DIN 69871 SK50 AD&B M16 x 100 G2,5 25000

ITEM NO.	PART NUMBER	DESCRIPTION	QTY.
1	FWS509H-TMH16119	SK50TMH16119FWW	1
2	GS-M4X4	GRUB SCREW-(B.O.)	2

NOTE:

BALANCING 2.5 G @ 25000 RPM

WEIGHT : 3.2 Kg

		µ m	0.012	0.025	0.05	0.1	0.2	0.4	0.8	1.6	3.2	6.3	12.5	25	50
		GRADES		N1	N2	N3	N4	N5	N6	N7	N8	N9	N10	N11	N12
		SYMBOLS													

TOLERANCE		
FREE DIMENSIONS TOLERANCE		
Dimns.	Dia	Length
0.5 to 3	± 0.05	± 0.10
3 to 6	± 0.10	± 0.15
6 to 30	± 0.15	± 0.20
30 to 120	± 0.20	± 0.25
120 to 500	± 0.30	± 0.50

MATERIALS: 16MnCr5

2019	NAME	DATE
DRAWN	PGK	20/07
CHECKED	RVL	20/07
APPROVED		
SCALE : NTS	QTY. :	

2002370.1601

PART NAME: SK50TMH16119FWW

DRAWING No. FWS509H-TMH16119

REV. 01