Rev.No.	Ch.Let	Alterations	Date	Sign.	Appd.

All Dimensions are in MM

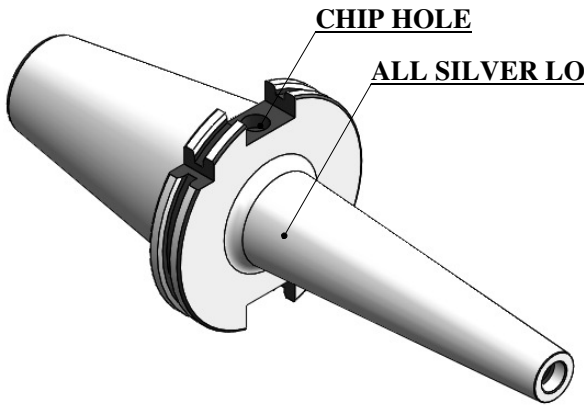

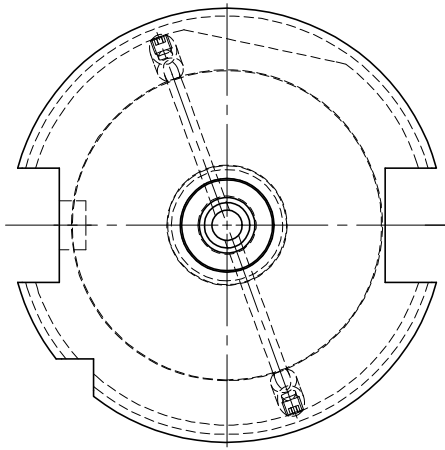

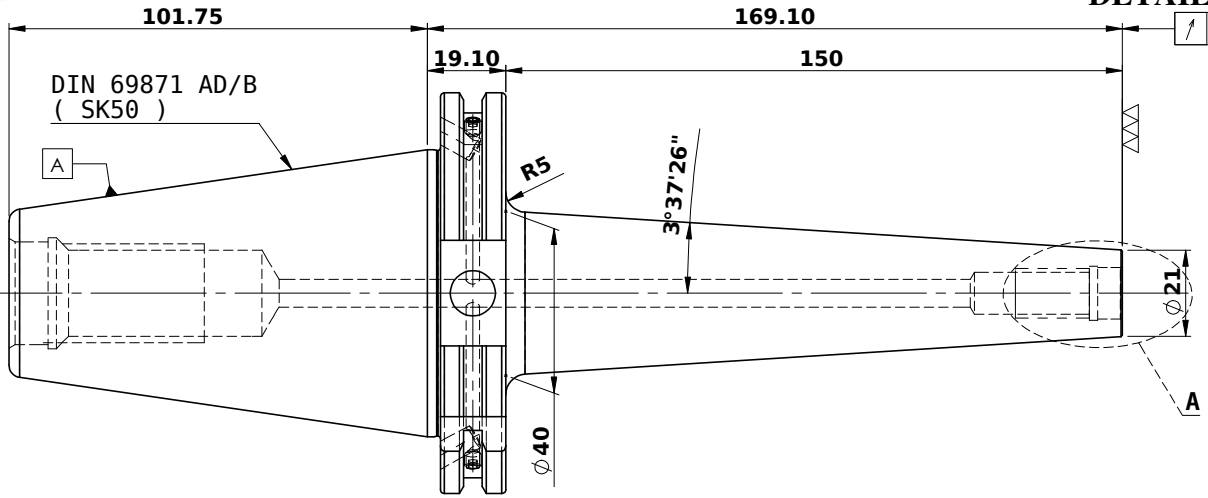

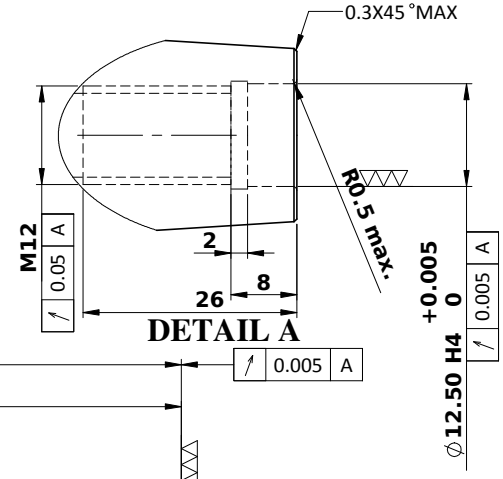

LABEL:-

2002370.1202
EINSCHRAUBFRÄSERAUFNAHME
SCREW-ON HOLDER
ISO7388-1 (DIN 69871) SK50 AD/AF(AD+B)
ES M12 x 150 mm x 169 mm
G2,5 / 25000 U/MIN

NOTE:

WEIGHT : 3.40Kg

BALANCING 2.5 G @ 25000 RPM

MARKING: ISO 7388-1 (DIN 69871) SK50 AD/AF (AD+B) M12 x 150mm
G2,5 25000 U/MIN

ITEM NO.	PART NUMBER	DESCRIPTION	QTY.
1	FWS509H-TMH12169	SK50TMH12169FWW	1
2	GS-M4X4	GRUB SCREW-(B.O.)	2

μm	0.012	0.025	0.05	0.1	0.2	0.4	0.8	1.6	3.2	6.3	12.5	25	50
GRADES	N1	N2	N3	N4		N5	N6	N7	N8	N9	N10	N11	N12
SYMBOLS	▽▽▽▽					▽▽▽		▽▽			▽		~

TOLERANCE		
FREE DIMENSIONS TOLERANCE		
Dimns.	Dia	Length
0.5 to 3	±0.05	±0.10
3 to 6	±0.10	±0.15
6 to 30	±0.15	±0.20
30 to 120	±0.20	±0.25
120 to 500	±0.30	±0.50

MATERIALS: 16MnCr5

2023	NAME	DATE
DRAWN	SJK	03/02
CHECKED	RVL	03/02
APPROVED		
SCALE : NTS	QTY. :	

2002370.1202

PART NAME: SK50TMH12169FWW

DRAWING No. FWS509H-TMH12169

REV. 00