Rev.No.	Ch.Let	Alterations	Date	Sign.	Appd.

All Dimensions are in MM

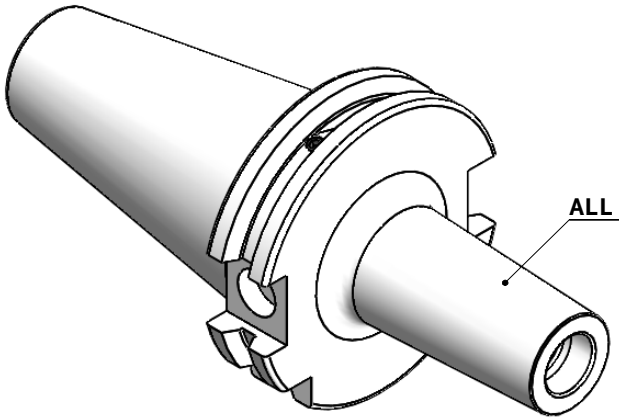

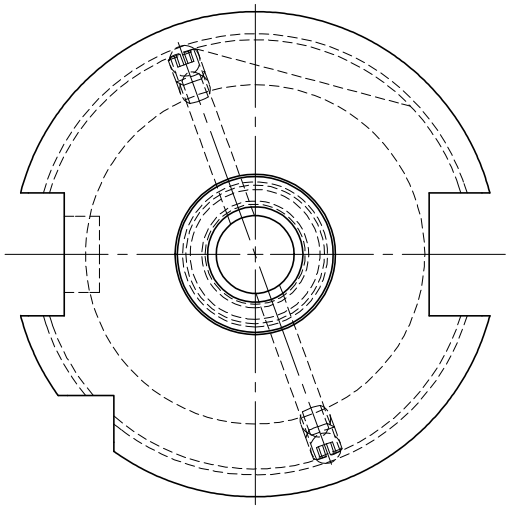

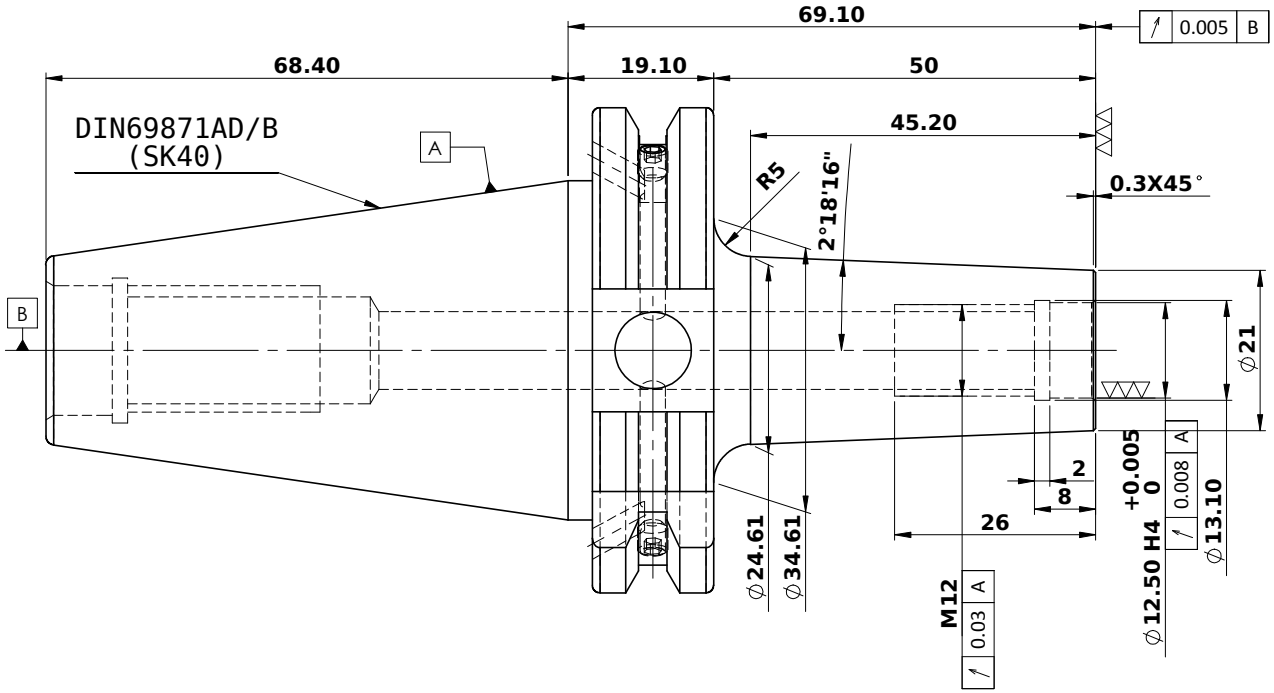

LABEL:-
2002369.1200
EINSCHRAUBFRÄSERAUFNAHME
SCREW-ON HOLDER
DIN 69871 AD&B SK40
ES M12 x 50 mm x 69 mm
G2,5 / 25000

MARKING:- DIN 69871 AD&B SK40 M12 x 50 mm

G2,5 25000

WT : 0.94 KG

BALANCING 2.5G @ 25000 RPM

ITEM NO.	PART NUMBER	DESCRIPTION	QTY.
1	SK40TMH12069FWW	THREAD MILL HOLDER	1
2	GS-M4X4	GRUB SCREW-(B.O.)	2

μ m	0.012	0.025	0.05	0.1	0.2	0.4	0.8	1.6	3.2	6.3	12.5	25	50
GRADES		N1	N2	N3	N4	N5	N6	N7	N8	N9	N10	N11	N12
SYMBOLS													

TOLERANCE		
FREE DIMENSIONS TOLERANCE		
Dimns.	Dia	Length
0.5 to 3	± 0.05	± 0.10
3 to 6	± 0.10	± 0.15
6 to 30	± 0.15	± 0.20
30 to 120	± 0.20	± 0.25
120 to 500	± 0.30	± 0.50

MATERIALS: 16MnCr5

2019	NAME	DATE
DRAWN	PGK	19/12
CHECKED	RVL	19/12
APPROVED		
SCALE : NTS	QTY. :	

2002369.1200

PART NAME: SK40TMH12069FWW

DRAWING No. FWS409H-TMH12069

REV. 00