Rev.No.	Ch.Let	Alterations	Date	Sign.	Appd.

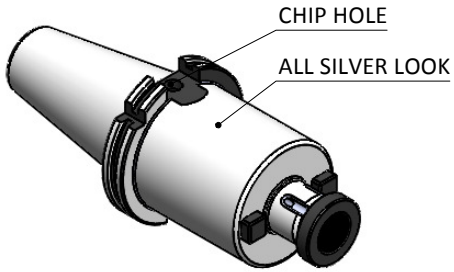

All Dimensions are in MM

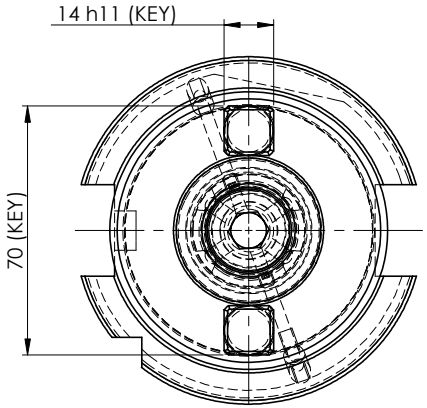

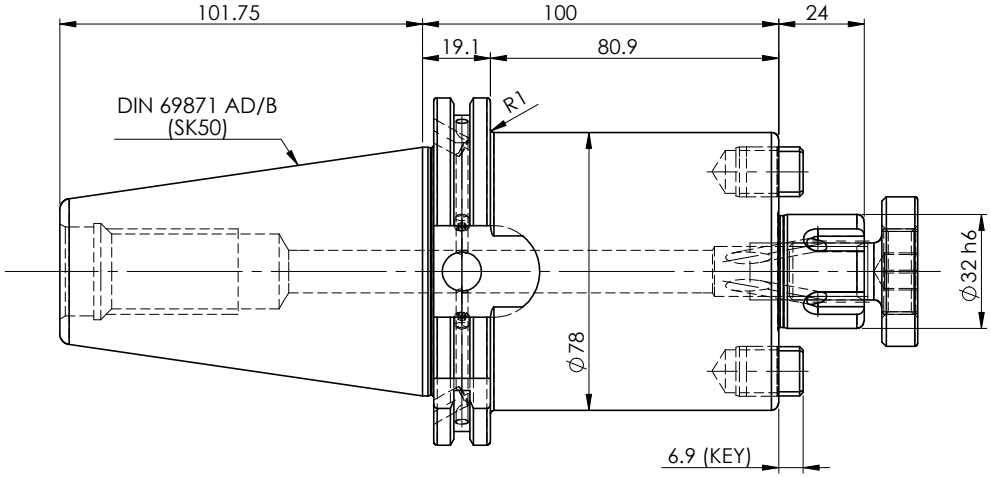

LABEL :

2002368.3201
AUFSTECKFRÄSDORN MIT IKZ
FACE MILL HOLDER COOLANT
ISO7388-1 (DIN69871) SK50 AD/AF (AD+B)
AS 32mm X 100mm
G2.5/ 25000 U/min

MARKING :

ISO7388-1 (DIN 69871)SK50 AD/AF(AD+B) D32 H100 IKZ
G2.5 25000 U/min

NOTE:

BALANCING 2.5G @ 25000 RPM

WEIGHT : 5.7 Kg

ITEM NO.	PART NUMBER	DESCRIPTION	QTY.
1	FWS509H-SMX32100	SK50SMS32100FWW	1
2	PLUG KEY 14-32	DRIVNG KEY	2
3	CCS-M16-32	CUTTER CLAMPING SCREW	1
4	GS-M4X4	GRUB SCREW-(B.O.)	2

μ m	0.012	0.025	0.05	0.1	0.2	0.4	0.8	1.6	3.2	6.3	12.5	25	50
GRADES	N1		N2	N3	N4	N5	N6	N7	N8	N9	N10	N11	N12
SYMBOLS													

TOLERANCE		
FREE DIMENSIONS TOLERANCE		
Dimns.	Dia	Length
0.5 to 3	± 0.05	± 0.10
3 to 6	± 0.10	± 0.15
6 to 30	± 0.15	± 0.20
30 to 120	± 0.20	± 0.25
120 to 500	± 0.30	± 0.50

MATERIALS: 16Mncr5

2014	NAME	DATE
DRAWN	Bala	09/09
CHECKED	RVL	09/09
APPROVED		
SCALE : NTS	QTY. :	

2002368.3201

PART NAME: SK50SMS32100FWW

DRAWING No. FWS509H-SMX32100

REV. 03