Rev.No.	Ch.Let	Alterations	Date	Sign.	Appd.

All Dimensions are in MM

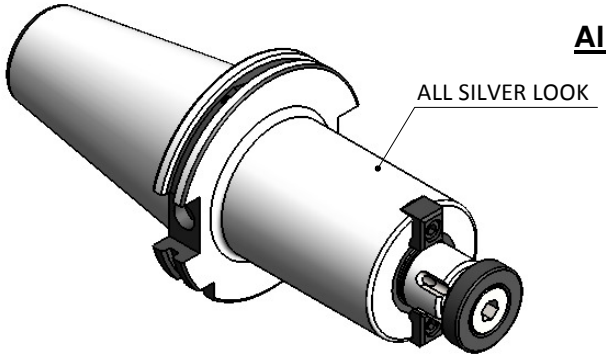

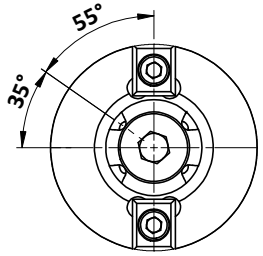

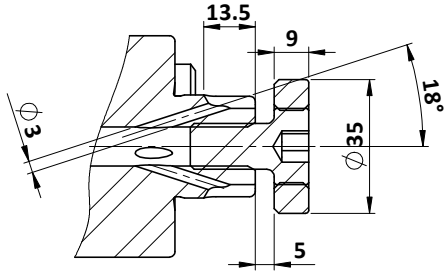

SECTION A-A (1 : 1.4)

CUSTOMER APPROVAL REQUIRED	
APPROVED BY	
DATE	

FOR QUOTATION PURPOSE ONLY

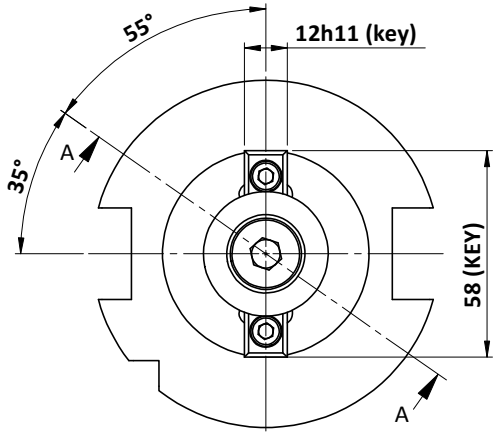

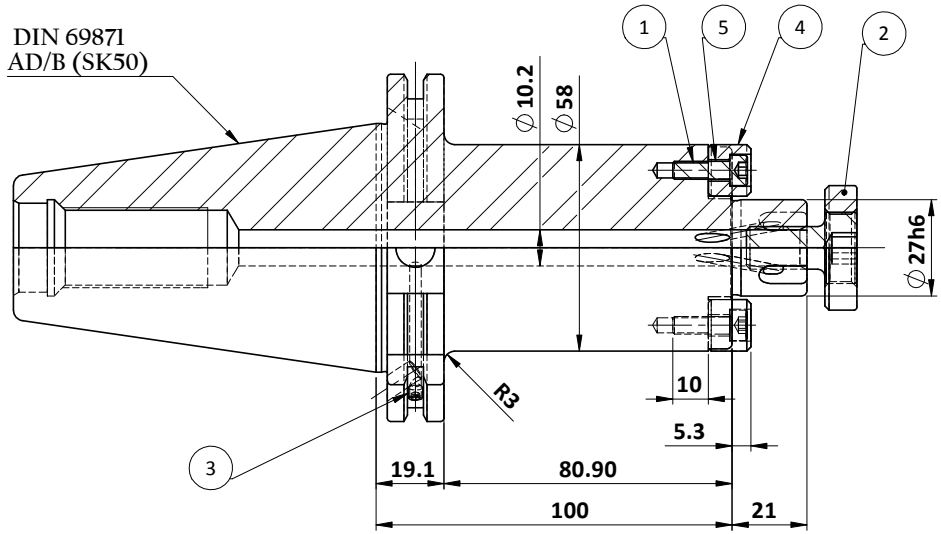

LABEL :

2002368.2701
AUFSTECKFRÄSDORN MIT IKZ
FACE MILL HOLDER COOLANT
DIN69871 SK50 ADB
AS 27mm X 100mm
G2.5/ 25000 U/min

MARKING :

DIN 69871 AD/B SK50 D27 H100 IKZ
G2.5 25000 U/min

WEIGHT :4.3 Kg.

BALANCING 2.5G @ 25000 RPM

ITEM NO.	PART NUMBER	DESCRIPTION	QTY
1	SK50 SMS27 100 FTC WW	FACE MILL HOLDER	1
2	CCS-M12-27	CUTTER CLAMPING SCREW	1
3	BO	GRUB SCREW M4X4	2
4	KEY 12x14.5x12 - 27	DRIVING KEY	2
5	B.O	ALLEN SCREW M5X16	2

μ m	0.012	0.025	0.05	0.1	0.2	0.4	0.8	1.6	3.2	6.3	12.5	25	50
GRADES	N1		N2	N3	N4	N5	N6	N7	N8	N9	N10	N11	N12
SYMBOLS	▽▽▽▽					▽▽▽		▽▽			▽		~

TOLERANCE		
FREE DIMENSIONS TOLERANCE		
Dimns.	Dia	Length
0.5 to 3	± 0.05	± 0.10
3 to 6	± 0.10	± 0.15
6 to 30	± 0.15	± 0.20
30 to 120	± 0.20	± 0.25
120 to 500	± 0.30	± 0.50

MATERIALS: 16Mncr5

2014	NAME	DATE
DRAWN	Bala	10/09
CHECKED	RVL	10/09
APPROVED		-
SCALE : NTS	QTY. :	

2002368.2701

PART NAME: FACE MILL HOLDER

DRAWING No. SK50 SMS27 100 FTC WW

REV. 00