Rev.No.	Ch.Let	Alterations	Date	Sign.	Appd.

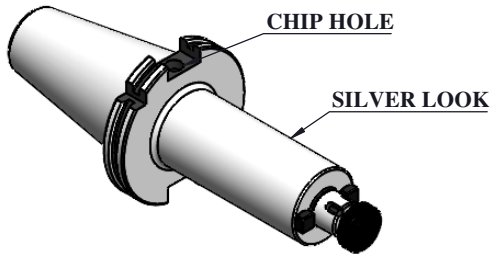

All Dimensions are in MM

For Customer Approval

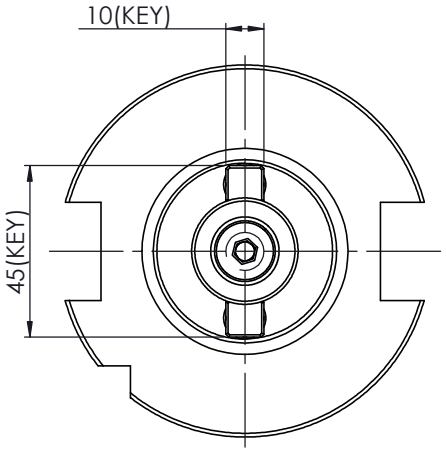

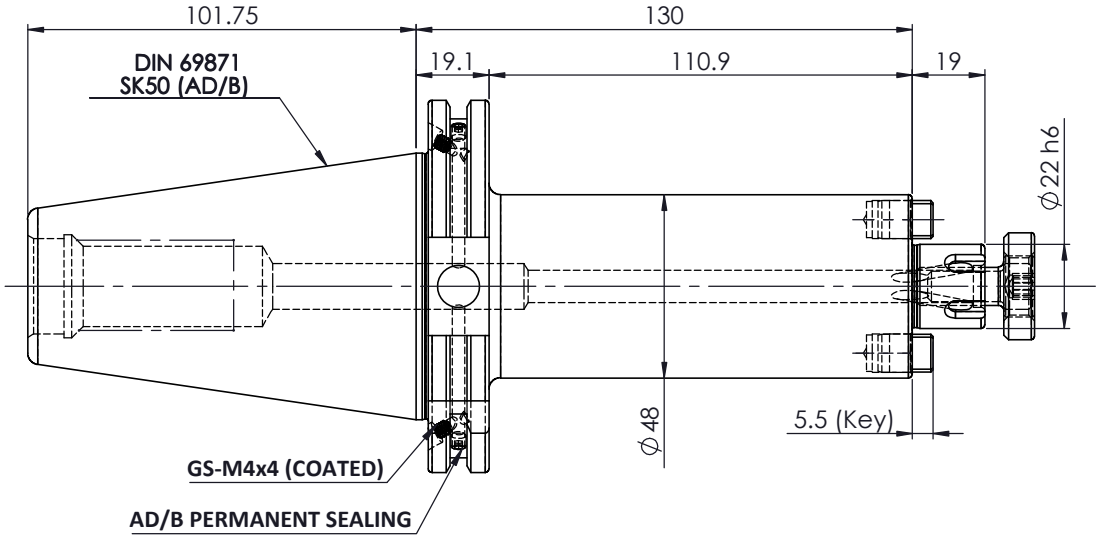

LABLE :

2002368.2205
AUFSTECKFRÄSDORN MIT IKZ FACE MILL HOLDER COOLANT
ISO7388-1(DIN69871) SK50 AD/AF(AD+B)
AS 22mm X 130mm
G2.5/ 25000 U/min

MARKING :

ISO7388-1(DIN 69871) SK50 AD/AF (AD+B) D22 H130 IKZ
G2.5 25000 U/min

Notes	
Balancing Value	G2.5 @ 25000 RPM
Approx Weight	4.20Kg

ITEM NO.	PART NUMBER	DESCRIPTION	QTY.
5	GS-M4X4 COATED	GRUB SCREW	2
4	GS-M4X4	GRUB SCREW-(B.O.)	2
3	CCS-M8-16	CUTTER CLAMPING SCREW (B.O.)	1
2	PLUG KEY 10-22	DRIVING KEY	2
1	FWS509H-SMX22130	SK50SMX22130FWW	1

μ m	0.012	0.025	0.05	0.1	0.2	0.4	0.8	1.6	3.2	6.3	12.5	25	50
GRADES	N1		N2	N3	N4	N5	N6	N7	N8	N9	N10	N11	N12
SYMBOLS													

TOLERANCE		
FREE DIMENSIONS TOLERANCE		
Dimns.	Dia	Length
0.5 to 3	± 0.05	± 0.10
3 to 6	± 0.10	± 0.15
6 to 30	± 0.15	± 0.20
30 to 120	± 0.20	± 0.25
120 to 500	± 0.30	± 0.50

MATERIALS: 16MnCr5

2017	NAME	DATE
DRAWN	MHP	11/03
CHECKED	RVL	11/03
APPROVED		
SCALE : NTS	QTY. :	

2002368.2205

PART NAME: SK50SMS22130FWW

DRAWING No. FWS509H-SMX22130

REV. 01