Rev.No.	Ch.Let	Alterations	Date	Sign.	Appd.

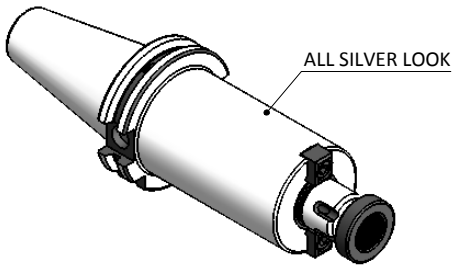

All Dimensions are in MM

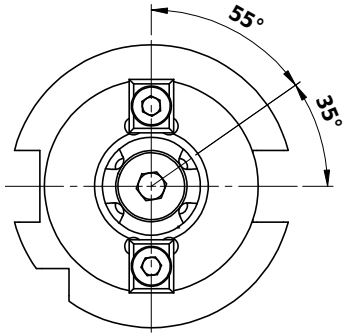

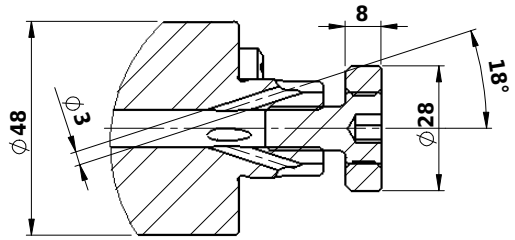

SECTION E-E (1 : 1.2)

CUSTOMER APPROVAL REQUIRED	
APPROVED BY	
DATE	

FOR QUOTATION PURPOSE ONLY

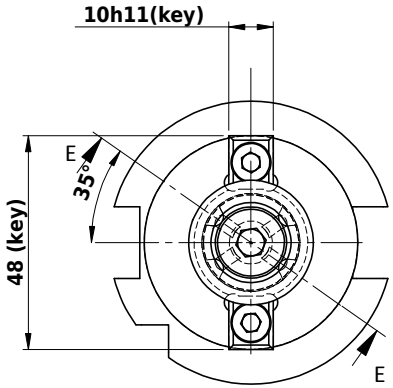

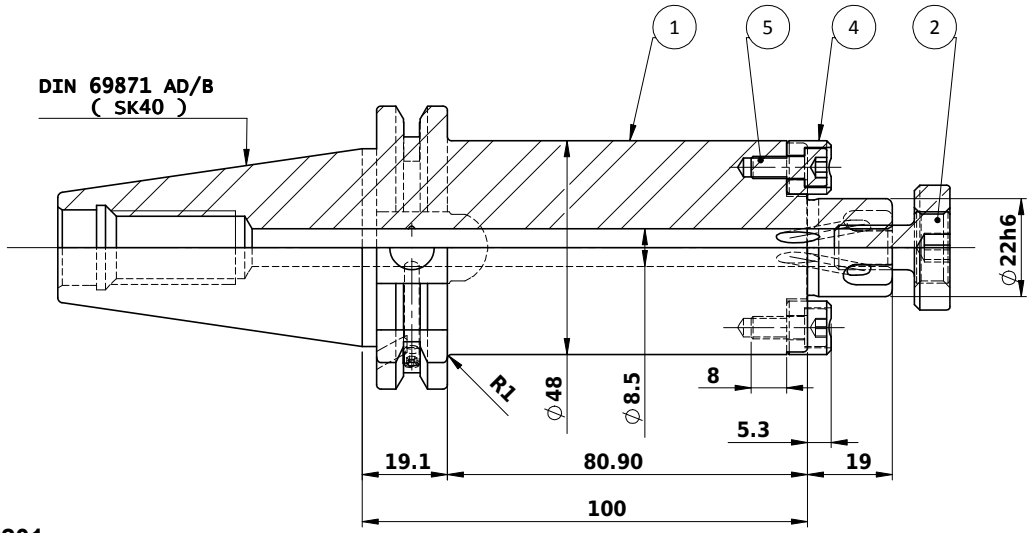

LABLE :

2002367.2201
AUFSTECKFRÄSDORN MIT IKZ
FACE MILL HOLDER COOLANT
DIN69871 SK40 ADB
AS 22mm X 100mm
G2.5/ 25000 U/min

WEIGHT : 2.0 Kg.

BALANCING 2.5G @ 25000 RPM

MARKING :

DIN 69871 AD/B SK40 D22 H100 IKZ
G2.5 25000 U/min

ITEM NO.	PART NUMBER	DESCRIPTION	QTY
1	SK40 SMS22 100 FTC WW	FACE MILL HOLDER	1
2	CCS-M10-22	CUTTER CLAMPING SCREW	1
3	BO	GRUB SCREW M4X4	2
4	KEY 10x12x10 - 22	DRIVING KEY	2
5	B.O.	ALLEN SCREW-M5X12	2

		μ m	0.012	0.025	0.05	0.1	0.2	0.4	0.8	1.6	3.2	6.3	12.5	25	50
		GRADES		N1	N2	N3	N4	N5	N6	N7	N8	N9	N10	N11	N12
		SYMBOLS													

TOLERANCE		
FREE DIMENSIONS TOLERANCE		
Dimns.	Dia	Length
0.5 to 3	± 0.05	± 0.10
3 to 6	± 0.10	± 0.15
6 to 30	± 0.15	± 0.20
30 to 120	± 0.20	± 0.25
120 to 500	± 0.30	± 0.50

MATERIALS: 16Mncr5

2014	NAME	DATE
DRAWN	Bala	10/09
CHECKED	RVL	10/09
APPROVED		-
SCALE : NTS	QTY. :	

2002367.2201

PART NAME: FACE MILL HOLDER

DRAWING No. SK40 SMS22 100 FTC WW

REV. 00