Rev.No.	Ch.Let	Alterations	Date	Sign.	Appd.

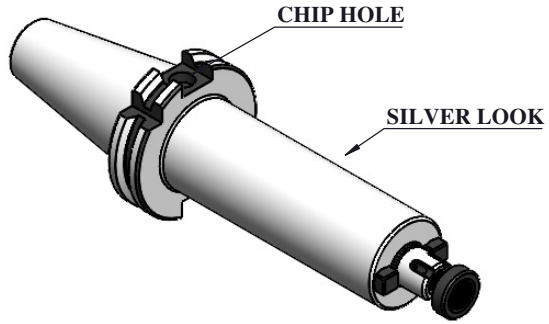

All Dimensions are in MM

For Customer Approval

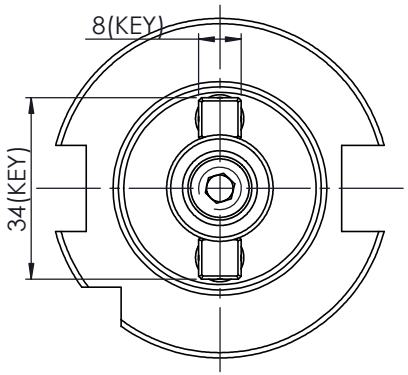

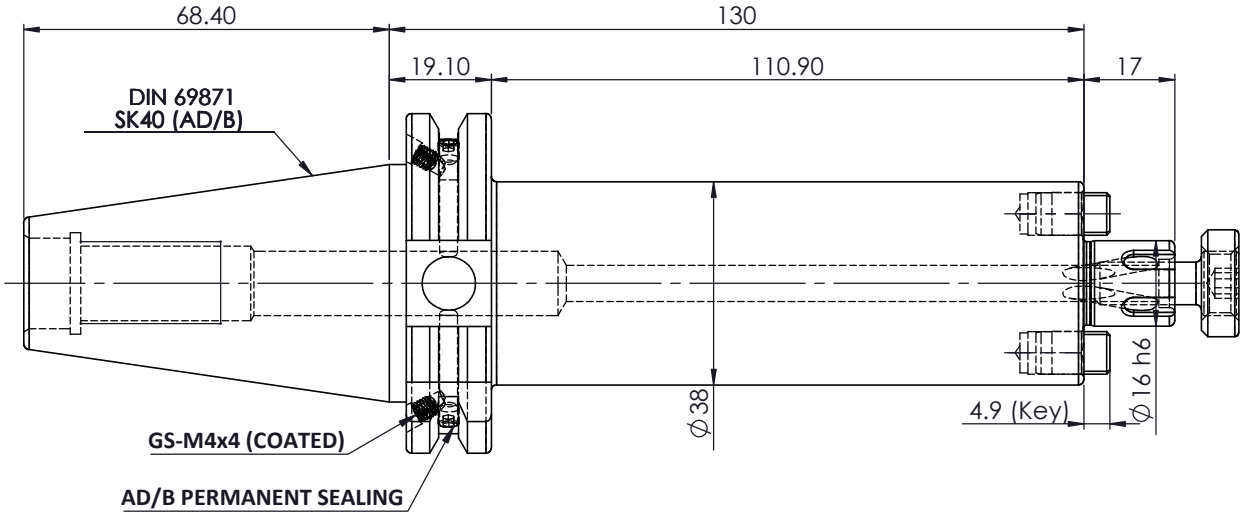

LABLE :

2002367.1605
AUFSTECKFRÄSDORN MIT IKZ FACE
MILL HOLDER COOLANT
ISO7388-1(DIN69871) SK40 AD/AF(AD+B)
AS 16mm X 130mm
G2.5/ 25000 U/min

MARKING :

ISO7388-1(DIN 69871) SK40(AD+B) D16 H130 IKZ
G2.5 25000 U/min

ITEM NO.	PART NUMBER	DESCRIPTION	QTY.
5	GS-M4X4 COATED	GRUB SCREW	2
4	GS-M4X4	GRUB SCREW-(B.O.)	2
3	CCS-M8-16	CUTTER CLAMPING SCREW (B.O.)	1
2	PLUG KEY 08-16	DRIVING KEY	2
1	FWS409H-SMX16130	SK40SMX16130FWW	1

Notes	
Balancing Value	G2.5 @ 25000 RPM
Approx Weight	1.80Kg

μ m	0.012	0.025	0.05	0.1	0.2	0.4	0.8	1.6	3.2	6.3	12.5	25	50
GRADES	N1		N2	N3	N4	N5	N6	N7	N8	N9	N10	N11	N12
SYMBOLS													

TOLERANCE		
FREE DIMENSIONS TOLERANCE		
Dimns.	Dia	Length
0.5 to 3	± 0.05	± 0.10
3 to 6	± 0.10	± 0.15
6 to 30	± 0.15	± 0.20
30 to 120	± 0.20	± 0.25
120 to 500	± 0.30	± 0.50

MATERIALS: 16MnCr5

2017	NAME	DATE
DRAWN	KSK	07/07
CHECKED	RVL	07/07
APPROVED		
SCALE : NTS	QTY. :	

2002367.1605

PART NAME: SK40SMS16130FTCWW

DRAWING No. FWS409H-SMX16130

REV. 01