Rev.No.	Ch.Let	Alterations	Date	Sign.	Appd.

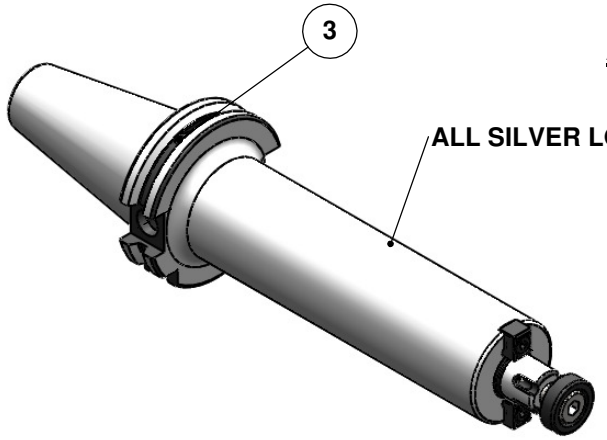

All Dimensions are in MM

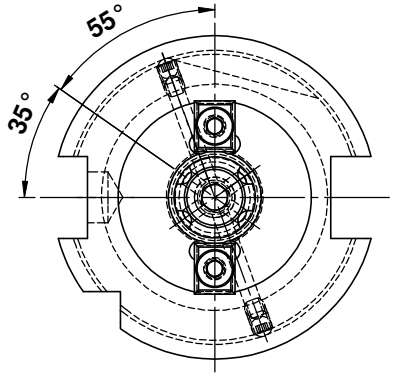

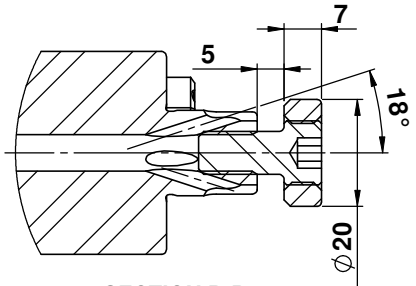

SECTION B-B
SCALE 1 : 1

CUSTOMER APPROVAL REQUIRED	
APPROVED BY	
DATE	

FOR QUOTATION PURPOSE ONLY

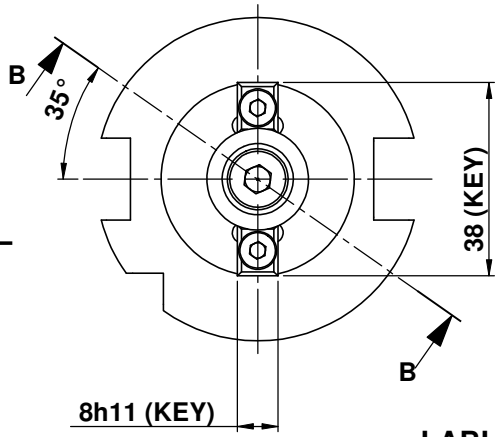

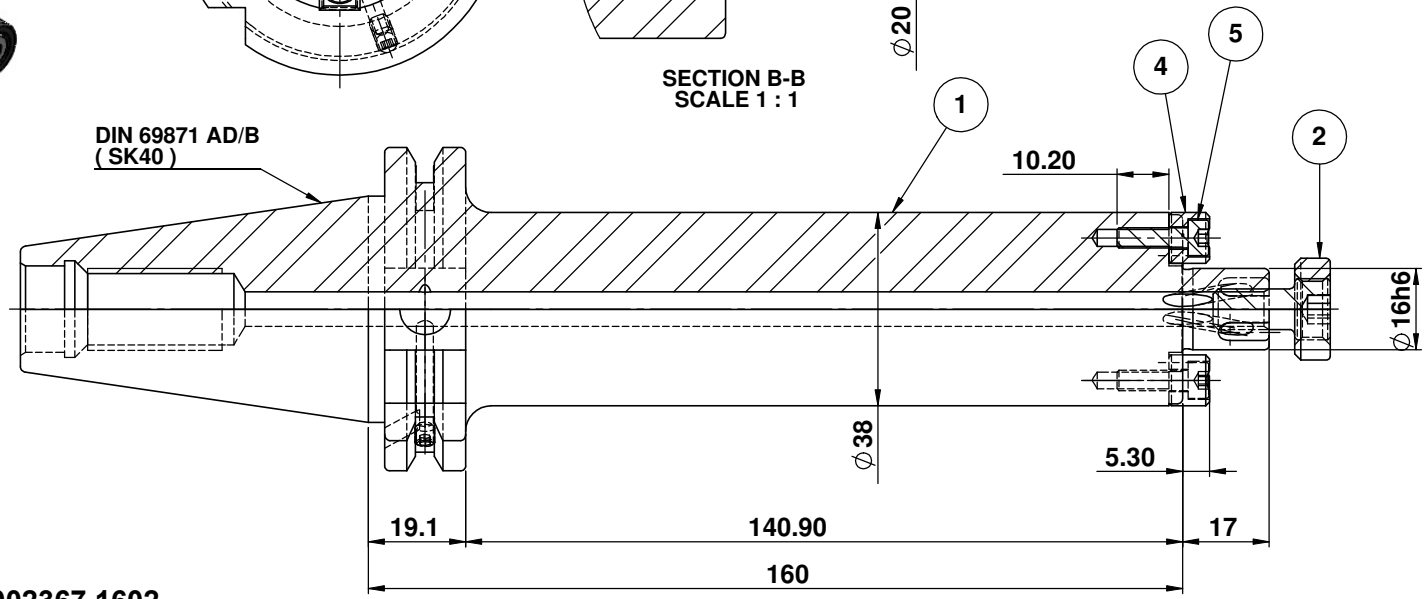

LABLE :

2002367.1602
AUFSTECKFRASDORN MIT IKZ
FACE MILL HOLDER COOLANT
DIN69871 SK40 ADB
AS 16mm X 160mm
G2.5/ 25000 U/min

WEIGHT : 2.0 Kg.

BALANCING 2.5G @ 25000 RPM

MARKING :
DIN 69871 AD/B SK40 A16 H160
G2.5 25000 U/min

ITEM NO.	DESCRIPTION	PART NUMBER	QTY.
1	FACE MILL HOLDER	SK40 SMS16 160 FTC WW	1
2	CUTTER CLAMPING SCREW	CCS-M8-16	1
3	GRUB SCREW M4X4	BO	2
4	TENON SPL	TN -FMH16	2
5	ALLEN SCREW M4X12	BO	2

μ m	0.012	0.025	0.05	0.1	0.2	0.4	0.8	1.6	3.2	6.3	12.5	25	50
GRADES		N1	N2	N3	N4	N5	N6	N7	N8	N9	N10	N11	N12
SYMBOLS													

TOLERANCE		
FREE DIMENSIONS TOLERANCE		
Dimns.	Dia	Length
0.5 to 3	± 0.05	± 0.10
3 to 6	± 0.10	± 0.15
6 to 30	± 0.15	± 0.20
30 to 120	± 0.20	± 0.25
120 to 500	± 0.30	± 0.50

MATERIALS: 16MnCr5

2014	NAME	DATE
DRAWN	Bala	17/07
CHECKED	RVL	17/07
APPROVED		
SCALE : NTS	QTY. :	

2002367.1602

PART NAME:
FACE MILL HOLDER

DRAWING No.
SK40 SMS16 160 FTC WW

REV. 00