Rev.No.	Ch.Let	Alterations	Date	Sign.	Appd.

CUSTOMER APPROVAL REQUIRED	
APPROVED BY	
DATE	

FOR QUOTATION PURPOSE ONLY

All Dimensions are in MM

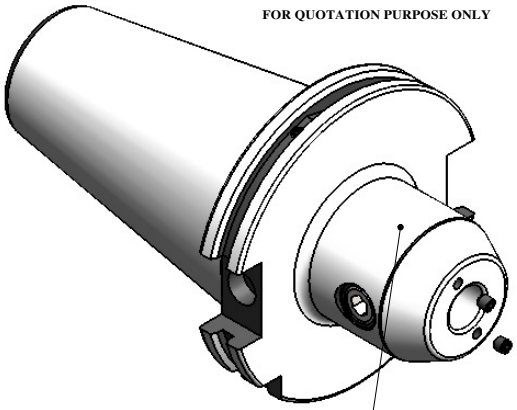

ALL SILVER LOOK

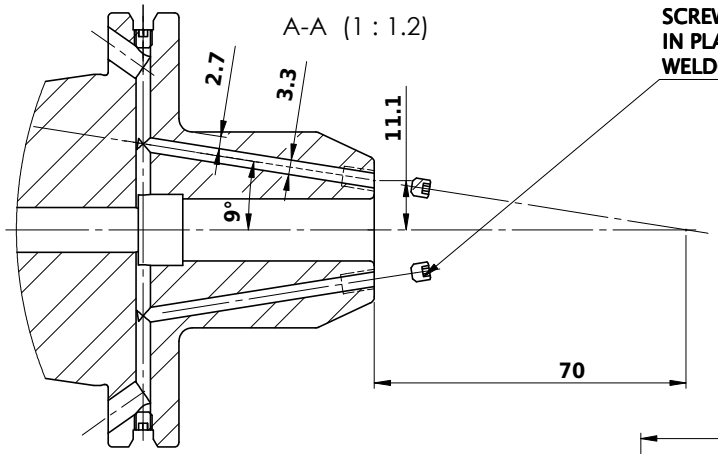

SCREWS TO BE PACKED SEPERATELY
IN PLASTIC POUCH WITH LABEL & PUT INTO
WELDON BORE & THEN SEAL THE HOLDER WITH COVER

LABEL FOR PLASTIC BAGS:
Verschlussschraube
Grub Screw
M4 X 4mm x 2 mm

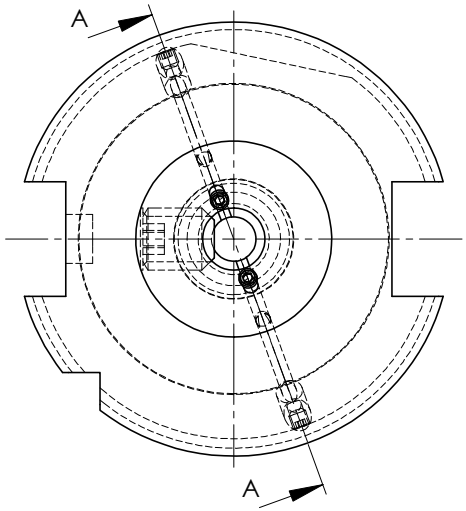

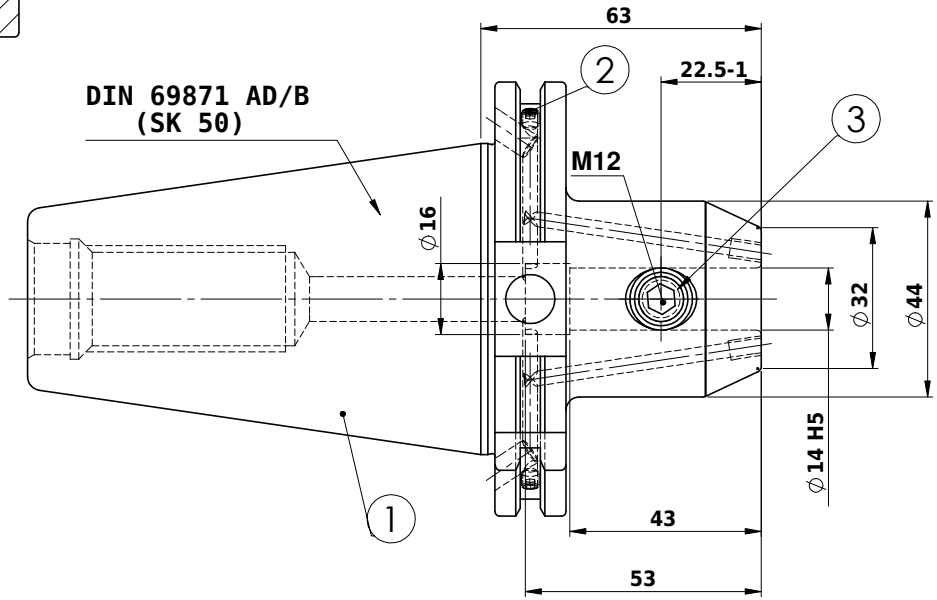

Label :
2002366.1400
WELDON-AUFNAHME MIT KK
WELD.HOLDER COOL.CHANNEL
DIN69871 SK50 ADB
Wk 14 mm x 63 mm
G6.3 / 15000

NOTE :

BALANCING 6.3G AT 15000 RPM

WEIGHT : 3.2 kg

MARKING : DIN 69871 AD/B SK50 EK14H63
G6.3 15000 U/MIN

ITEM NO.	PART NUMBER	DESCRIPTION	QTY.
1	SK50 EK 14 063 FTC WW	END MILL HOLDER	1
2	BO	GRUB SCREW M4X4	4
3	B.O.	GS-M14X16-DIN1835-B	1

μ m	0.012	0.025	0.05	0.1	0.2	0.4	0.8	1.6	3.2	6.3	12.5	25	50
GRADES		N1	N2	N3	N4	N5	N6	N7	N8	N9	N10	N11	N12
SYMBOLS													

TOLERANCE		
FREE DIMENSIONS TOLERANCE		
Dimns.	Dia	Length
0.5 to 3	± 0.05	± 0.10
3 to 6	± 0.10	± 0.15
6 to 30	± 0.15	± 0.20
30 to 120	± 0.20	± 0.25
120 to 500	± 0.30	± 0.50

MATERIALS:
16MnCr5

2014	NAME	DATE
DRAWN	RK	28/07
CHECKED	RVL	28/07
APPROVED		-
SCALE : NTS	QTY. :	

PART NAME:
END MILL HOLDER

2002366.1400

DRAWING No.
SK50 EK 14 063 FTC WW

REV.
00