Rev.No.	Ch.Let	Alterations	Date	Sign.	Appd.

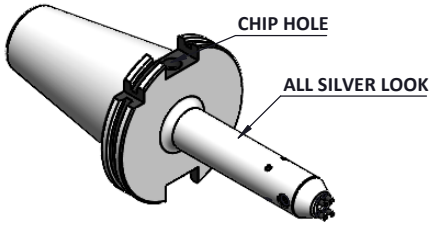

All Dimensions are in MM

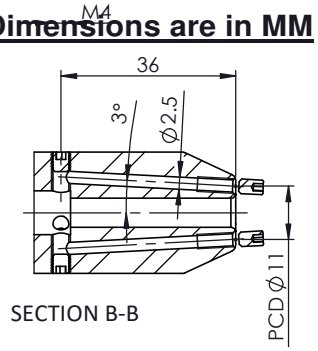

SECTION B-B

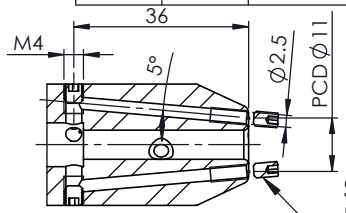

SECTION A-A

For Customer Approval

SCREWS TO BE PACKED SEPERATELY IN PLASTIC POUCH WITH LABEL & PUT INTO WELDON BORE & THEN SEAL THE HOLDER WITH COVER

LABEL FOR PLASTIC BAGS:
Verschlussschraube
Grub Screw
M3 X 5mm x 1.5mm

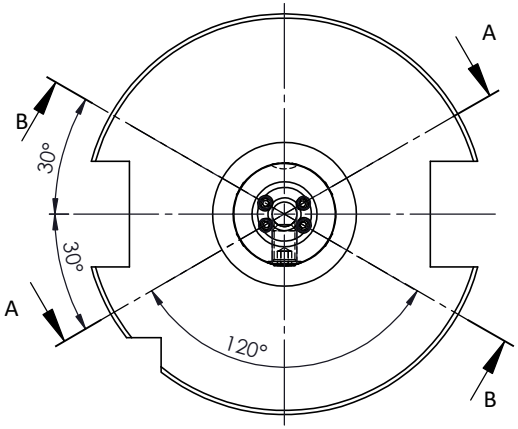

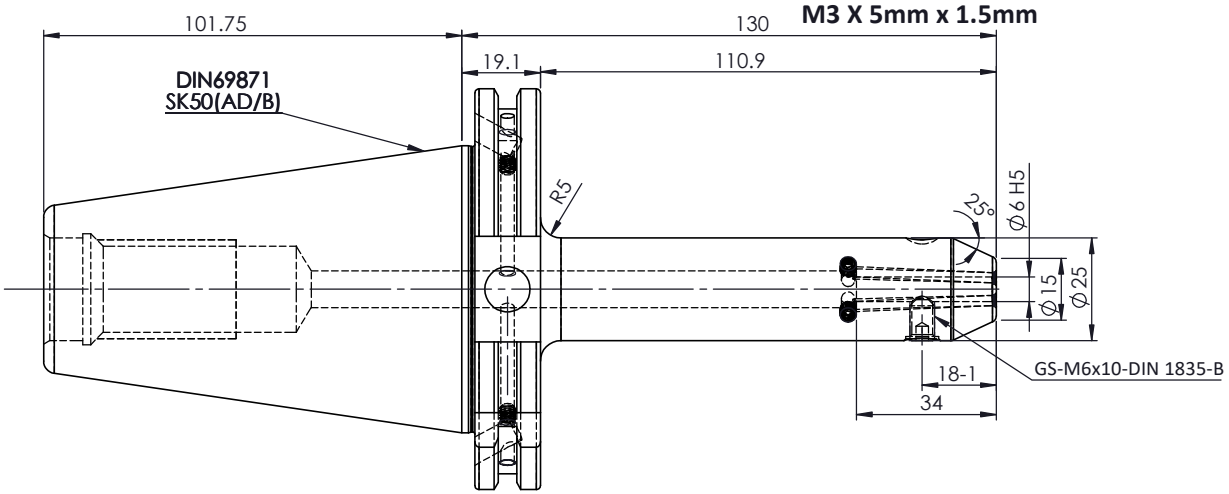

LABEL :

2002366.0605
WELDON-AUFNAHME MIT KK
WELD.HOLDER COOL.CHANNEL
ISO 7388-1 (DIN69871) SK50 AD/AF (AD+B)
WK 06 mm x 130 mm
G2.5 25000 U/MIN

NOTE :

BALANCING 2.5G AT 25000 RPM

WEIGHT :2.9 Kg

MARKING : ISO 7388-1 (DIN69871) SK50 AD/AF (AD+B) WK06 H130
G2.5 25000 U/MIN

ITEM NO.	PART NUMBER	DESCRIPTION	QTY.
1	FWS509H-EKH06130	SK50EK06130FWW	1
2	GS-M6X10-DIN1835-B	GRUB SCREW	1
3	GS-M3X5	GRUB SCREW	4
4	GS-M4X4	GRUB SCREW	4
5	GS-M4X4-COATING	GRUB SCREW	2

μ m	0.012	0.025	0.05	0.1	0.2	0.4	0.8	1.6	3.2	6.3	12.5	25	50
GRADES		N1	N2	N3	N4	N5	N6	N7	N8	N9	N10	N11	N12
SYMBOLS													

TOLERANCE FREE DIMENSIONS TOLERANCE		
Dimns.	Dia	Length
0.5 to 3	± 0.05	± 0.10
3 to 6	± 0.10	± 0.15
6 to 30	± 0.15	± 0.20
30 to 120	± 0.20	± 0.25
120 to 500	± 0.30	± 0.50

MATERIALS: 16MnCr5

2023	NAME	DATE
DRAWN	SVR	09/12
CHECKED	RVL	09/12
APPROVED		
SCALE : NTS	QTY. :	

2002366.0605

PART NAME: SK50EK06130FWW

DRAWING No. FWS509H-EKH06130

REV. 00