Rev.No.	Ch.Let	Alterations	Date	Sign.	Appd.

All Dimensions are in MM

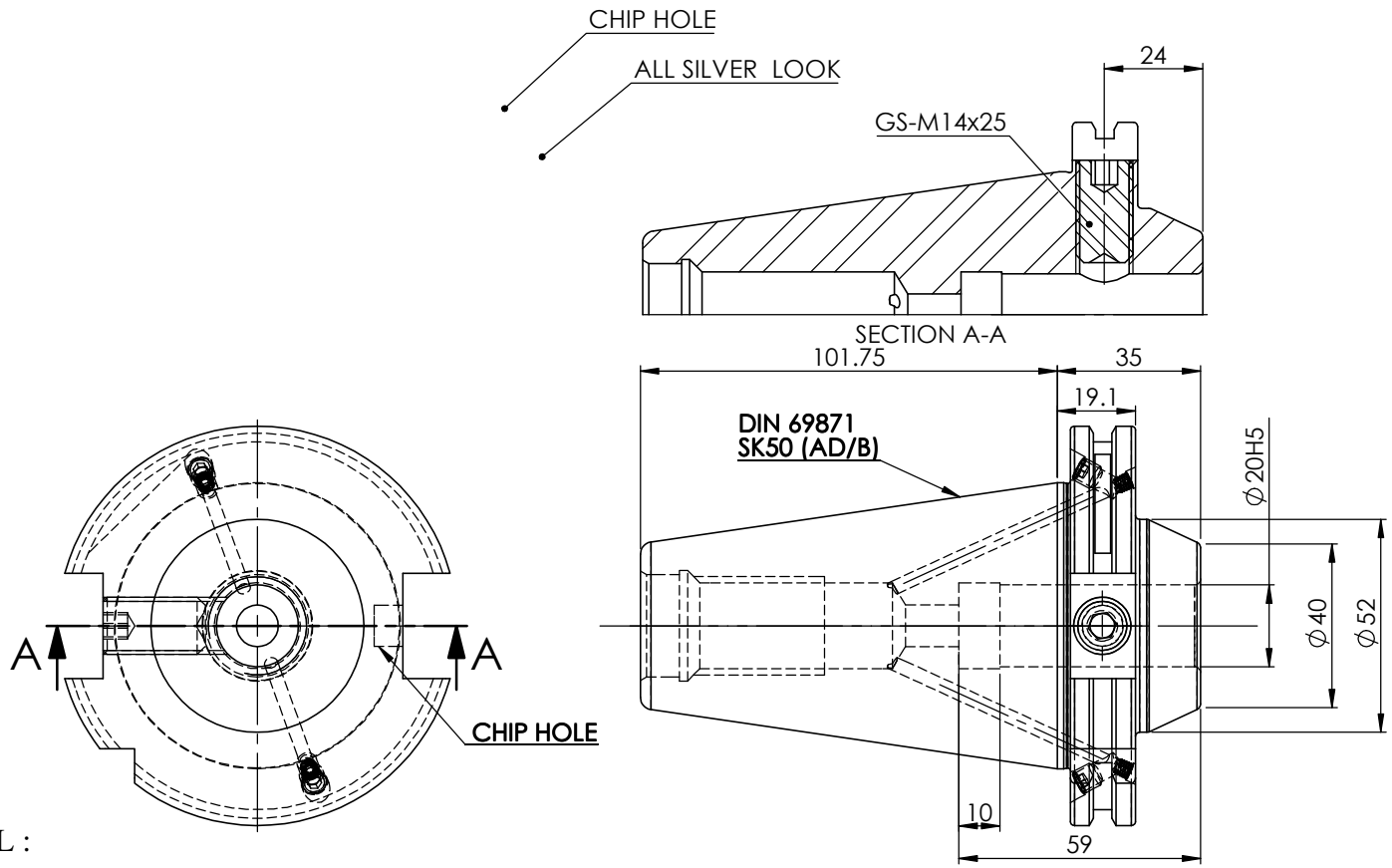

LABEL :

2002365.2004
EXTRA KURZE WELDON-AUFNAHME
EXTRA SHORT WELDON HOLDER
ISO 7388 -1 (DIN 69871) SK50 AD/AF (AD+B)
WE 20 mm x 35 mm
G2.5 25000 U/MIN

MARKING : ISO 7388 -1 (DIN 69871) SK50 AD/AF (AD+B) WE20 H035
G2.5 25000 U/MIN

NOTE :

BALANCING 2.5G AT 25000 RPM

WEIGHT: 2.7 Kg

ITEM NO.	PART NUMBER	DESCRIPTION	QTY.
1	FWS509H-EMH20035	SK50EM20035FWW	1
2	GS-M4X4	GRUB SCREW	2
3	GS-M6x6	GRUB SCREW -(B.O.)	2
4	GS-M12x12-DIN1835-B	GRUB SCREW-(B.O.)	1

μ m	0.012	0.025	0.05	0.1	0.2	0.4	0.8	1.6	3.2	6.3	12.5	25	50
GRADES		N1	N2	N3	N4	N5	N6	N7	N8	N9	N10	N11	N12
SYMBOLS													

TOLERANCE FREE DIMENSIONS TOLERANCE		
Dimns.	Dia	Length
0.5 to 3	± 0.05	± 0.10
3 to 6	± 0.10	± 0.15
6 to 30	± 0.15	± 0.20
30 to 120	± 0.20	± 0.25
120 to 500	± 0.30	± 0.50

MATERIALS: 16MnCr5

2016	NAME	DATE
DRAWN	SVK	08/09
CHECKED	RVL	08/09
APPROVED		
SCALE : NTS	QTY. :	

2002365.2004

PART NAME: SK50EM20035FWW

DRAWING No. FWS509H-EMH20035

REV. 01