Rev.No.	Ch.Let	Alterations	Date	Sign.	Appd.

All Dimensions are in MM

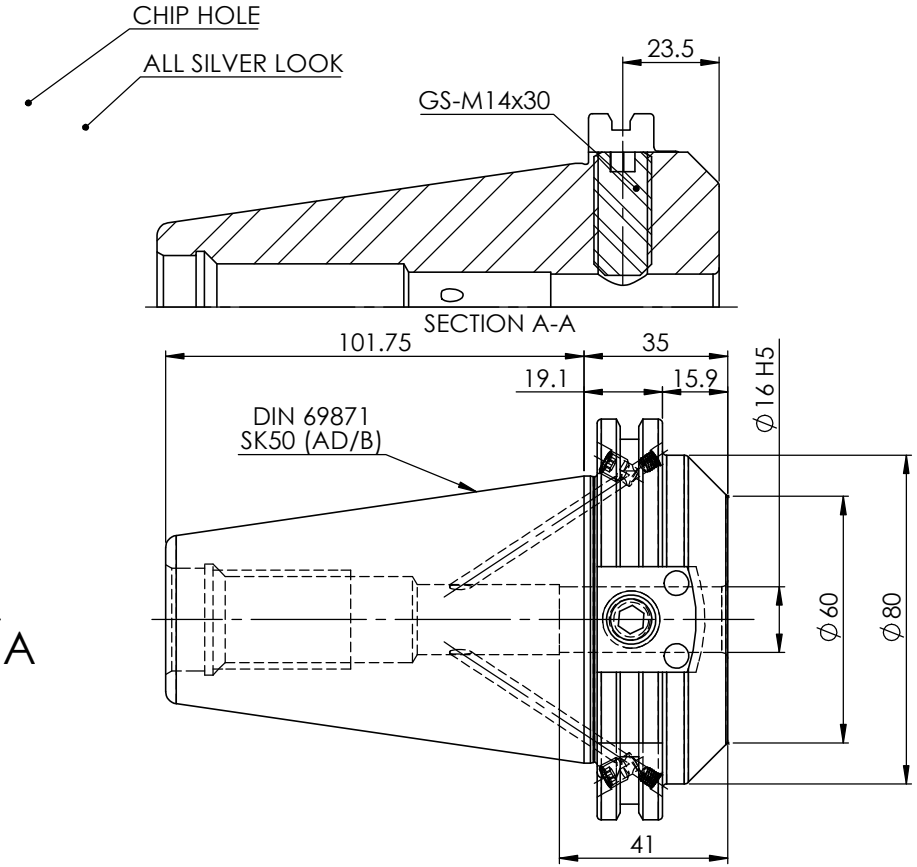

LABEL :

2002365.1604
WELDON-AUFNAHME EXTRA KURZ
WELDON HOLDER EXTRA SHORT
ISO 7388 -1 (DIN 69871) SK50 AD/AF (AD+B)
WE 16 mm x 35 mm
G2.5 25000 U/MIN

NOTE :

BALANCING 2.5G AT 25000 RPM

WEIGHT: 3.0 Kg

MARKING : ISO 7388 -1 (DIN 69871) SK50 AD/AF (AD+B) WE16 H035
G2.5 25000 U/MIN

ITEM NO.	PART NUMBER	DESCRIPTION	QTY.
1	FWS509H-EMH16035	SK50EM16035FWW	1
2	GS-M14X30-DIN1835-B	GRUB SCREW-(B.O)	1
3	GS-M4X4	GRUB SCREW	2
4	GS-M6x6	GRUB SCREW -(B.O.)	2

μ m	0.012	0.025	0.05	0.1	0.2	0.4	0.8	1.6	3.2	6.3	12.5	25	50
GRADES		N1	N2	N3	N4	N5	N6	N7	N8	N9	N10	N11	N12
SYMBOLS													

TOLERANCE		
FREE DIMENSIONS TOLERANCE		
Dimns.	Dia	Length
0.5 to 3	± 0.05	± 0.10
3 to 6	± 0.10	± 0.15
6 to 30	± 0.15	± 0.20
30 to 120	± 0.20	± 0.25
120 to 500	± 0.30	± 0.50

MATERIALS: 16MnCr5

2016	NAME	DATE
DRAWN	SVK	26/11
CHECKED	RVL	26/11
APPROVED		
SCALE : NTS	QTY. :	

2002365.1604

PART NAME: SK50EM16035FWW

DRAWING No. FWS509A-EMH16035

REV. 01