THIS DRAWING IS THE PROPERTY OF M/S FALCON TOOLINGS. THIS SHOULD NOT BE COPIED, LENT FOR ANY PURPOSE BY ANY FIRM / APPROVAL WITHOUT OUR PERMISSION IN WRITING. THIS SHOULD BE RETURNED IN ORIGINAL CONDITION WHEN DEMANDED.

Rev.No.	Ch.Let	Alterations	Date	Sign.	Appd.

All Dimensions are in MM

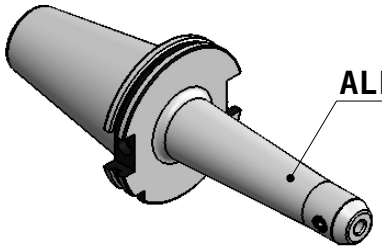

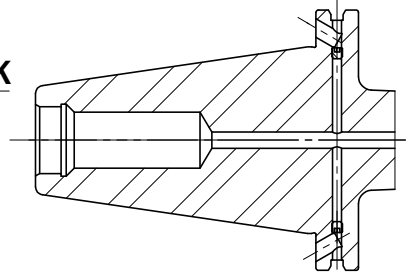

CUSTOMER APPROVAL REQUIRED	
APPROVED BY	
DATE	

FOR QUOTATION PURPOSE ONLY

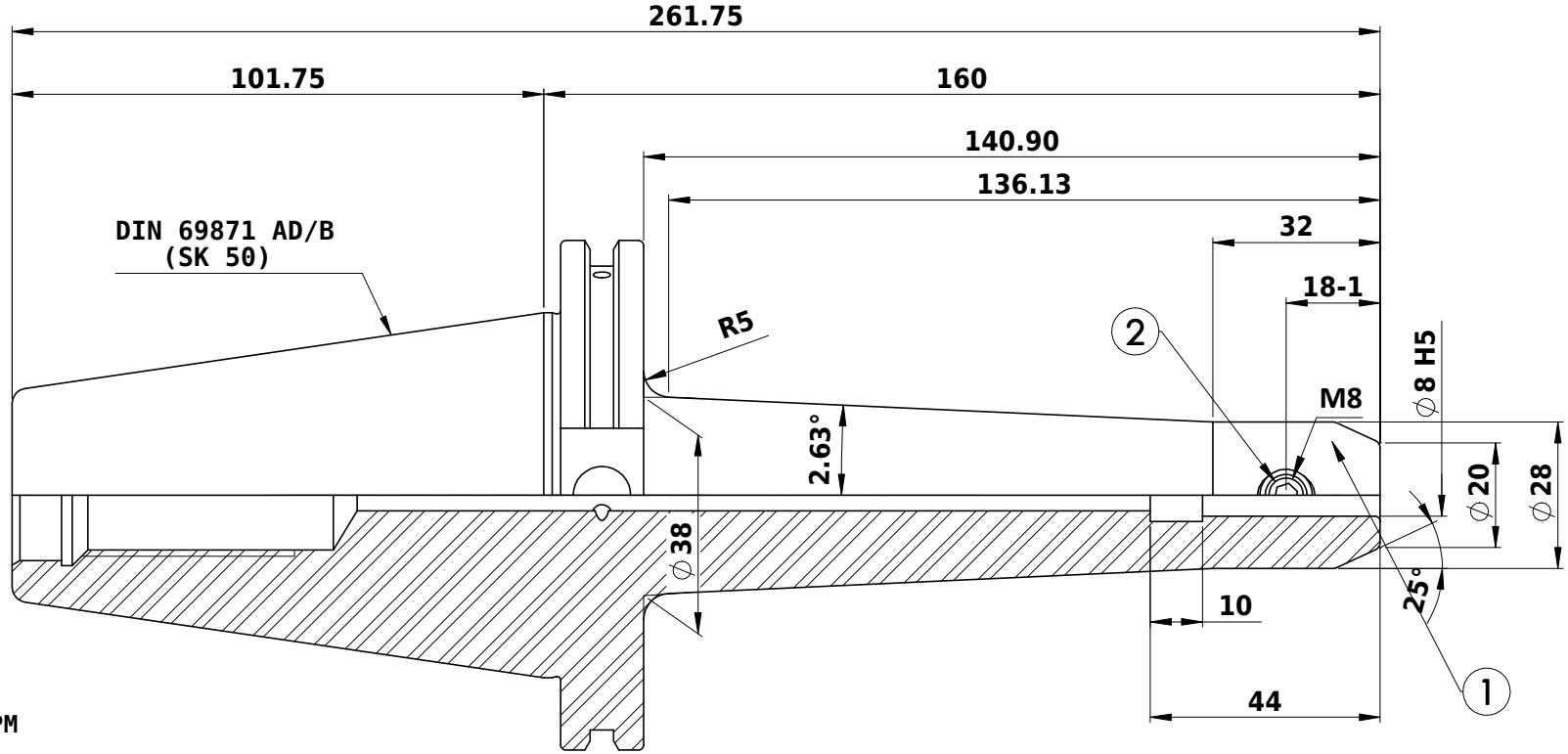

Label :
2002365.0802
WELDON-AUFNAHME
WELDON HOLDER
DIN69871 SK50 ADB
WE 08 mm x 160 mm
G2.5 / 25000

NOTE :

BALANCING G2.5 AT 25000 RPM

WEIGHT : 3.55 kg

MARKING : DIN 69871 AD/B SK50 WE08H160
G2.5 25000 U/MIN

ITEM NO.	PART NUMBER	DESCRIPTION	QTY.
1	SK50 EM 08 160 FTC WW	END MILL HOLDER	1
2	GS-M8X10-DIN1835-B	GRUB SCREW-(B.O.)	1
3	GS-M4X4	GRUB SCREW-(B.O.)	2

μm	0.012	0.025	0.05	0.1	0.2	0.4	0.8	1.6	3.2	6.3	12.5	25	50
GRADES	N1	N2	N3	N4		N5	N6	N7	N8	N9	N10	N11	N12
SYMBOLS													

TOLERANCE		
FREE DIMENSIONS TOLERANCE		
Dimns.	Dia	Length
0.5 to 3	±0.05	±0.10
3 to 6	±0.10	±0.15
6 to 30	±0.15	±0.20
30 to 120	±0.20	±0.25
120 to 500	±0.30	±0.50

MATERIALS: 16MnCr5

2015	NAME	DATE
DRAWN	MKP	01/07
CHECKED	RVL	01/07
APPROVED		–

SCALE : NTS QTY. :

PART NAME: END MILL HOLDER

2002365.0802

DRAWING No. SK50 EM 08 160 FTC WW

REV. 00