Rev.No.	Ch.Let	Alterations	Date	Sign.	Appd.

All Dimensions are in MM

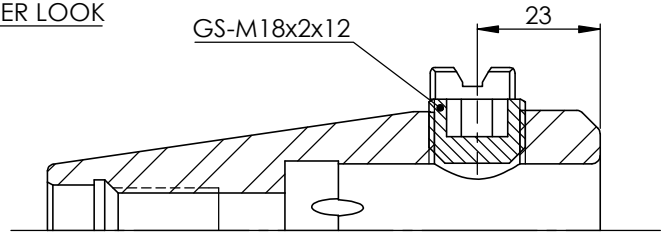

SECTION A-A

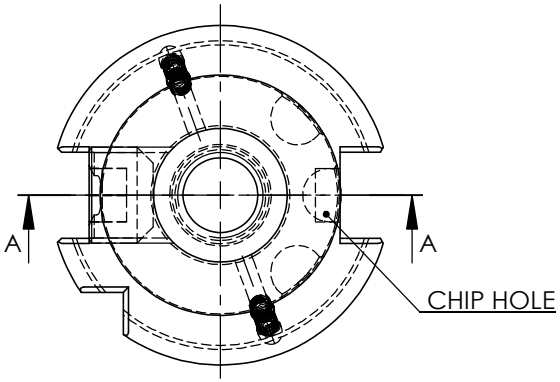

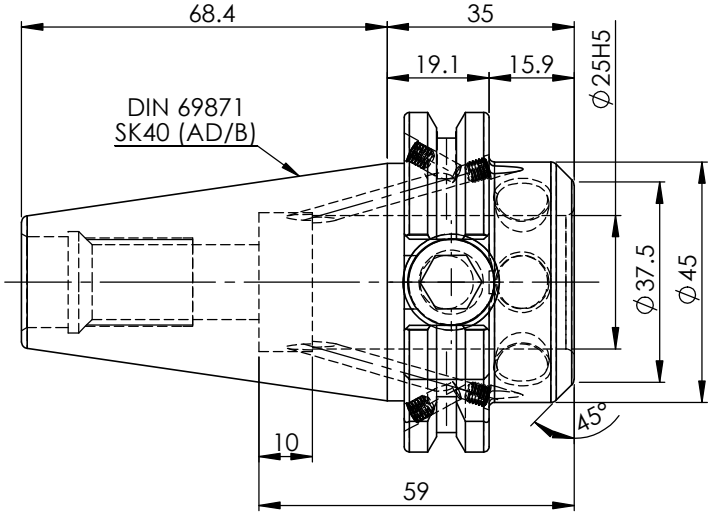

LABEL :

2002364.2504
EXTRA KURZE WELDON-AUFNAHME
EXTRA SHORT WELDON HOLDER
ISO7388-1 (DIN 69871)SK40 AD/AF (AD+B)
WE 25 mm x 35 mm
G2.5 25000 U/MIN

MARKING : ISO 7388-1 (DIN 69871) SK40 AD/AF(AD+B) WE25H035
G2.5 25000 U/MIN

ITEM NO.	PART NUMBER	DESCRIPTION	QTY.
1	FWS409H-EMH25035	SK40EM25035FWW	1
2	GS-M4X4	GRUB SCREW	4
3	GS-M18X2X12	GRUB SCREW(B.O)	1

NOTE :

BALANCING 2.5G AT 25000 RPM

WEIGHT: 0.8 Kg

		μ m	0.012	0.025	0.05	0.1	0.2	0.4	0.8	1.6	3.2	6.3	12.5	25	50
		GRADES		N1	N2	N3	N4	N5	N6	N7	N8	N9	N10	N11	N12
		SYMBOLS													

TOLERANCE		
FREE DIMENSIONS TOLERANCE		
Dimns.	Dia	Length
0.5 to 3	± 0.05	± 0.10
3 to 6	± 0.10	± 0.15
6 to 30	± 0.15	± 0.20
30 to 120	± 0.20	± 0.25
120 to 500	± 0.30	± 0.50

MATERIALS: 16MnCr5

2015	NAME	DATE
DRAWN	ELA	02/06
CHECKED	RVL	02/06
APPROVED		
SCALE : NTS	QTY. :	

2002364.2504

PART NAME: SK40EM25035WW

DRAWING No. FWS409H-EMH25035

REV. 06