THIS DRAWING IS THE PROPERTY OF M/S FALCON TOOLINGS. THIS SHOULD NOT BE COPIED, LENT FOR ANY PURPOSE BY ANY FIRM / APPROVAL WITHOUT OUR PERMISSION IN WRITING. THIS SHOULD BE RETURNED IN ORIGINAL CONDITION WHEN DEMANDED.

Rev.No.	Ch.Let	Alterations	Date	Sign.	Appd.

All Dimensions are in MM

CUSTOMER APPROVAL REQUIRED	
APPROVED BY	
DATE	

FOR QUOTATION PURPOSE ONLY

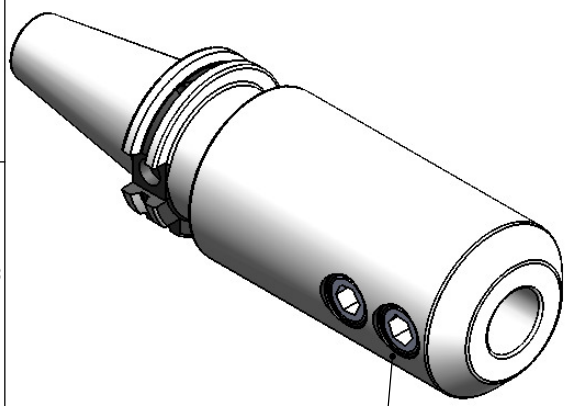

ALL SILVER LOOK

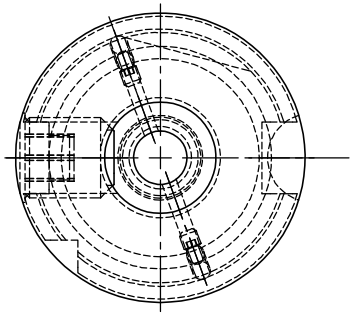

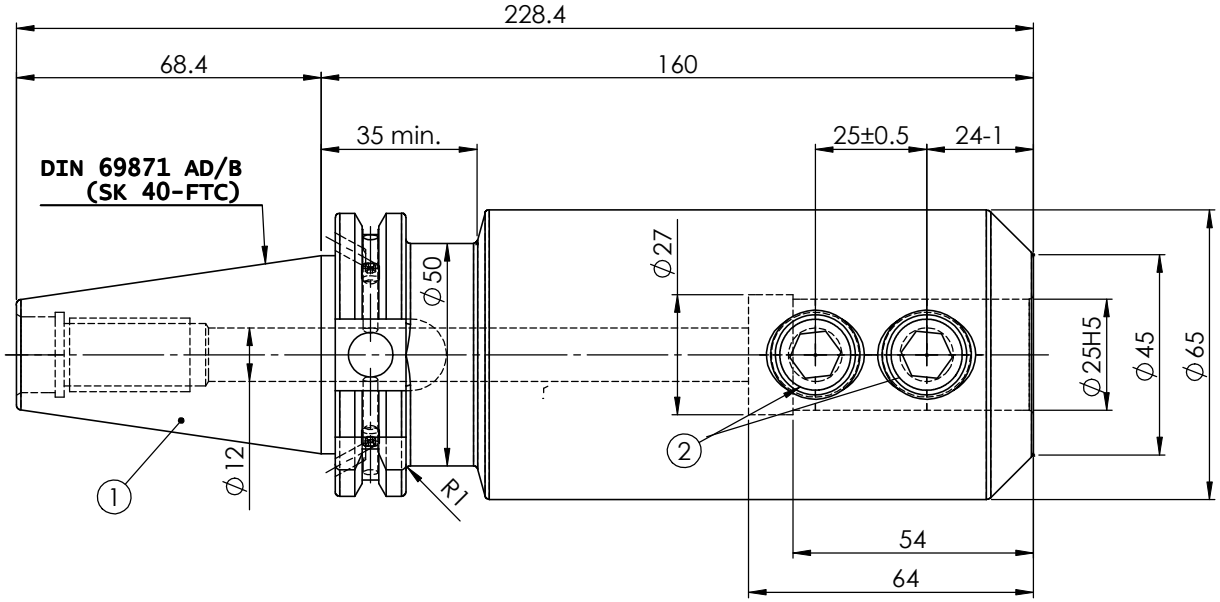

NOTE :

BALANCING G2.5 AT 25000 RPM

WEIGHT : 3.8 kg

MARKING : DIN 69871 AD/B SK40 WE25H160
G2.5 25000 U/MIN

Label :
2002364.2502
WELDON-AUFNAHME
WELDON HOLDER
DIN69871 SK40 ADB
WE 25 mm x 160 mm
G2.5 / 25000

ITEM NO.	PART NUMBER	DESCRIPTION	QTY.
1	SK40 EM 25 160 FTC WW	END MILL HOLDER	1
2	GS-M18X20X2-DIN1835-B	GRUB SCREW-(B.O.)	2
3	GS-M4x4	GRUB SCREW-(B.O)	2

μm	0.012	0.025	0.05	0.1	0.2	0.4	0.8	1.6	3.2	6.3	12.5	25	50
GRADES	N1	N2	N3	N4		N5	N6	N7	N8	N9	N10	N11	N12
SYMBOLS	▽▽▽▽					▽▽▽		▽▽			▽		~

TOLERANCE		
FREE DIMENSIONS TOLERANCE		
Dimns.	Dia	Length
0.5 to 3	±0.05	±0.10
3 to 6	±0.10	±0.15
6 to 30	±0.15	±0.20
30 to 120	±0.20	±0.25
120 to 500	±0.30	±0.50

MATERIALS: 16MnCr5

2015	NAME	DATE
DRAWN	Bala	29/06
CHECKED	RVL	29/06
APPROVED		
SCALE : NTS	QTY. :	

2002364.2502

PART NAME: END MILL HOLDER

DRAWING No. **SK40 EM 25 160 FTC WW**

REV. 00